EVVA
access to security

Product Catalogue Release 3

Product Catalogue

Compendium | 3KS*plus*, EPS, DPI and ALS

EVVA
access to security

www.Bravite.com

www.Bravite.com

EVVA
access to security

A ▶ EVVA Sicherheitstechnologie GmbH
Wienerbergstraße 59–65 | A-1120 Wien
T +43 1 811 65-0 | F +43 1 812 20 71
office-wien@evva.com | www.evva.com

EVVA Sicherheitssysteme GmbH
Ing.-Julius-Raab-Straße 2 | A-2721 Bad Fischau-Brunn
T +43 2622 42288 | F +43 2622 42288-34
office-badfischau@evva.com | www.evvasys.com

D ▶ EVVA Sicherheitstechnik GmbH
Höffgeshofweg 30 | D-47807 Krefeld
T +49 2151 37 36-0 | F +49 2151 37 36-635
office-krefeld@evva.com | www.evva.de

EVVA Sicherheitstechnik GmbH & Co. KG
Föpplstraße 15 | D-04347 Leipzig
T +49 341 234 090-5 | F +49 341 234 090-760
office-leipzig@evva.com | www.evva.de

EVVA Sicherheitstechnik GmbH & Co. KG
Kiefholzstraße 287 | D-12437 Berlin-Treptow
T +49 30 536 017-0 | F +49 30 536 017-722
office-berlin@evva.com | www.evva.de

CH ▶ EVVA Schweiz AG
Schöntalstrasse 19 | CH-8486 Rikon
T +41 52 235 07-35 | F +41 52 235 07-36
office-schweiz@evva.com | www.evva.ch

EVVA Schweiz AG
Bionstrasse 3 | CH-9015 St. Gallen
T +41 71 314 60-20 | F +41 71 314 60-25
office-schweiz@evva.com | www.evva.ch

www.Bravite.com

Table of Contents

3KS*plus* – 3-curve system **2**

Keys 4
Double cylinders 8
Thumbturn cylinders 18
Half cylinders 23
Round cylinders 25
Padlocks 28
Cam locks 32
Cabinet cylinders 53
Rim cylinders 60
Portal cylinders 65
EMZY 67
Country-specific cylinders 68
Cam variants 79

EPS, DPI and ALS – conventional locking systems **81**

Keys 85
Double cylinders 89
Thumbturn cylinders 101
Half cylinders 107
Padlocks 111
Cam locks 119
Cabinet cylinders 128
Rim cylinders 140
Portal cylinders 145
EMZY 147
Cam variants 148


EVVA
3KS
plus

3KS*plus*

3-curve system

The 3KS (3-curve system) is a reversible key system that distinguishes itself by virtue of its unique springless operating principle. Unlike classic locking systems, locking elements in the 3KS cylinder move along the curves of the key under positive control, not pushed by spring force. This ensures the best wear resistance and picking protection. Thanks to the enormous number of possible variations, complex master key systems can be calculated and unusual lock authorisation requests can be fulfilled.
3KS cylinders in Euro profile are manufactured modularly, thus an on-site length adaptation can be made anytime.

Key copying protection

- Organisational protection through a legitimating procedure for key reorders.
- Legal protection through patents and industrial property rights
- Technical protection through sophisticated curve pattern

Cylinder Security

- Picking protection
- Drilling protection through hard metal elements in the housing and plug
- Pulling protection
- Bump key protection

Length deviations of 0.5 mm per cylinder side possible.

B 5351 GEPRÜFT W$_2$6 VdS SKG® E30

www.Bravite.com

3KSplus
3-curve system

Standard key

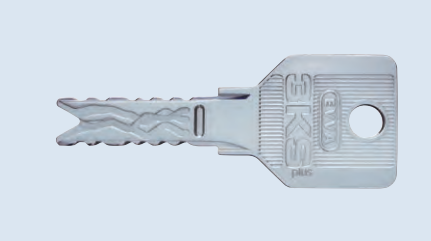

Ordering information
- SL [system and key number]

Technical data
- key made of an especially durable nickel silver alloy

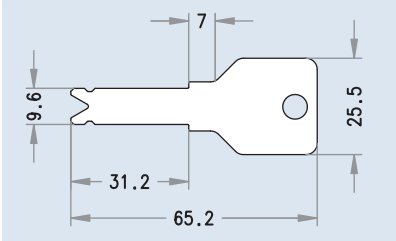

Key with colour dot

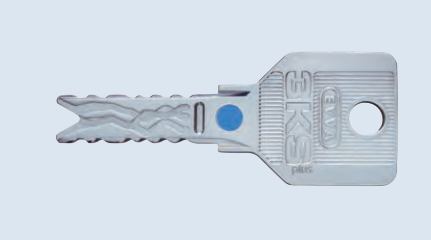

Ordering information
- SL [system and key number]
- colour dot [colour] red, blue, green, yellow, brown, black, ice green, violet, dark red, aubergine, pink

Technical data
- key made of an especially durable nickel silver alloy
- recessed colour dot on key neck

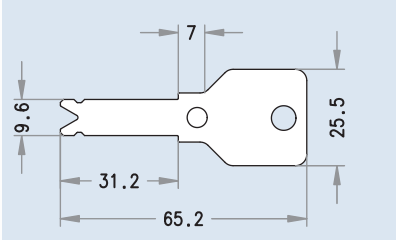

Key with elongated neck

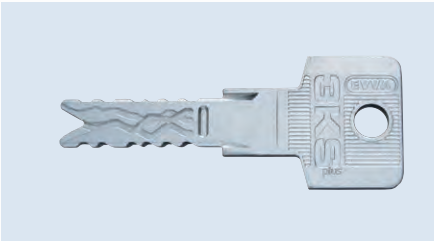

Ordering information
- SLLH [system and key number]

Technical data
- specially shaped key made of a durable nickel silver alloy for use with armoured security escutcheons

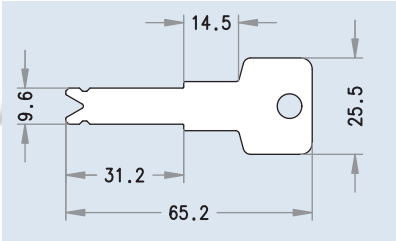

www.Bravite.com

Product catalogue, Release 01/10/2009
Errors and misprints excepted. Subject to technical change without notice.

Key with plastic cap

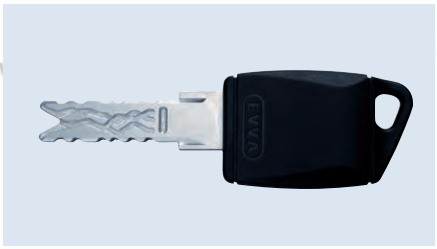

Technical data

- key made of an especially durable nickel silver alloy
- key cap of plastic, colour: anthracite
- key upper section of plastic, colour: red, blue, yellow, green.

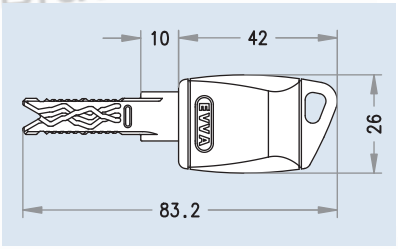

Ordering information

- SLKA [system and key number]
- when not otherwise specified, key has anthracite colour or key upper section in red, blue, green, yellow

Key with additional numeration



Technical data

- numeration according to customer request (in addition to system number and key number), e.g. "Mom"
- running key numeration (keys with identical authorisations receive running number)
- key made of an especially durable nickel silver alloy

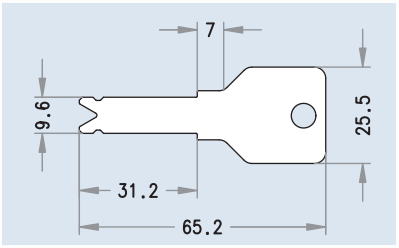

Ordering information

- SL [system and key number] designation/ number per customer request when technically possible, up to 18 characters (no special characters)

www.Bravite.com

Proximity combi-key



Technical data

- key with integrated electronic identification medium (non-contact)
- key head of durable polycarbonate, colour anthracite

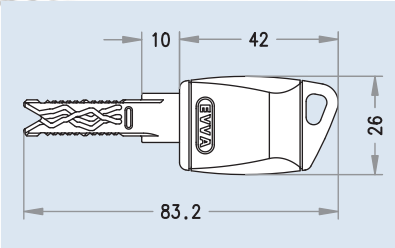

Ordering information

- SL [system and key number] CCM1KES (MIFARE 1k, anthracite)
- SL [system and key number] CCM4KES (MIFARE 4k, anthracite)
- SL [system and key number] CCD4KES (Desfire 4k, anthracite)
- SL [system and key number] CCL1KES (Legic 1k, anthracite)
- red or yellow cap colour possible

iButton combi-key



Technical data

- key with integrated electronic identification medium (contact)
- key head of durable polycarbonate, colour anthracite

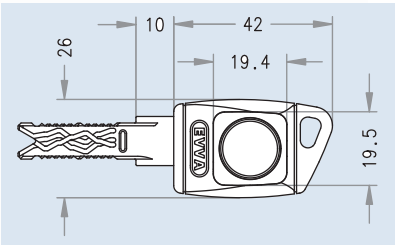

Ordering information

- SL [system and key number] CEIRWES (iButton R/W 512B)

www.Bravite.com

Combi-key upgrade variants



Ordering information
- SL [system and key number] CE000TS

Technical data
- key is prepared for the integration of electronic upgrade media (non-contact and contact)
- key head of durable polycarbonate, without electronics, colour anthracite
- key can be equipped on-site by the customer with an upgrade medium

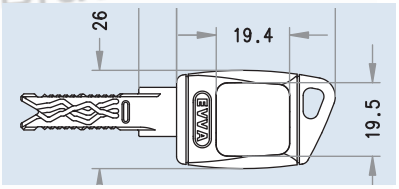

MIFARE 1 K/Legic 1 K combi-key upgrade medium

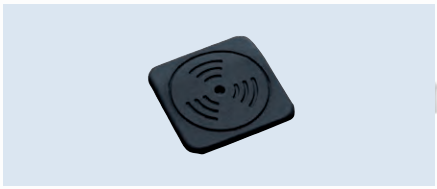

Ordering information
- CMM1KE0
- CML1KE0

Technical data
- key cap with integrated electronic identification medium for use in combi-key upgrade variants
- MIFARE 1 K identification medium
- Legic 1 K identification medium

iButton R/W 512 B combi-key upgrade medium



Ordering information
- CMIRWE0

Technical data
- key cap with integrated electronic identification medium for use in combi-key upgrade variants
- iButton R/W 512 B identification medium

www.Bravite.com

3KSplus
3-curve system

Double cylinder DZ



Ordering information

- DZ cylinder length A/B, [finish], [security and usage options]

Applications and usage

- for mortise locks per DIN or ÖNORM
- for mortise locks per harmonised European norms
- for mortise locks with profile cylinder aperture

Functional characteristics

- lockable from both sides with key
- 360 degree cam movement
- cam removal position, 30 degrees (from the short side)

Security features

- hard metal drill protection in plug and housing
- anti-pulling protection through chrome/nickel linking axis
- vertical key insertion and optimal scan of locking elements

Technical data

- cylinder housing: base material, brass
- cylinder plug: base material, brass
- all scanning elements coated with Triflon
- cam base position, 30 degrees
- cam width, 9.3 mm
- modular cylinder structure

Included in delivery

locking cylinder with fastening screw

Assembly & operation

- easy cylinder installation in a prepared, empty cylinder aperture
- cylinder overhang may not exceed 3 mm for security-relevant doors
- cylinder fixation via a M5 fastener bore hole

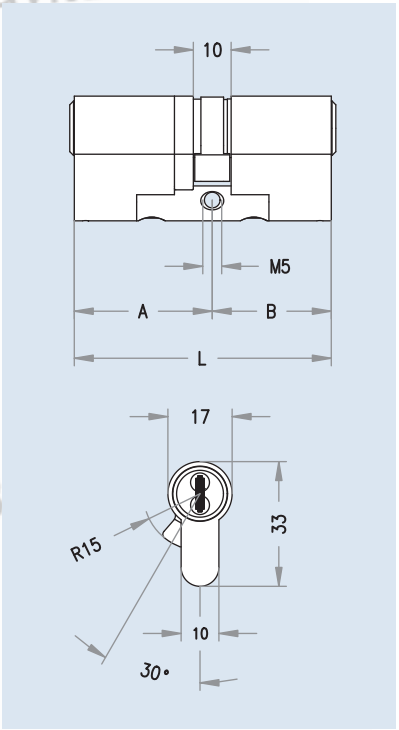

Cylinder lengths

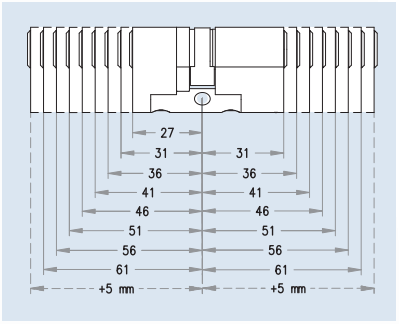

Cylinder length 27/31 not possible!

Finishes

Finishes	Abbreviations	Standard	Surcharge
Polished brass lacquered	MP	●	
Satin nickel	NI	●	
Polished nickel	NP		O
Satin chrome	CR		O
Polished chrome	CP		O
Patinated black	PS		O
Patinated brown	PB		O
Satin brass	MS		O
PVD coated	PVD-MS		O

www.Bravite.com

Product catalogue, Release 01/10/2009
Errors and misprints excepted. Subject to technical change without notice.

Double cylinder DZ | Options



BSZ - external key override double cylinder, danger function for double cylinder

Permits operation of the cylinder even when an authorised key is inserted in the opposite side.

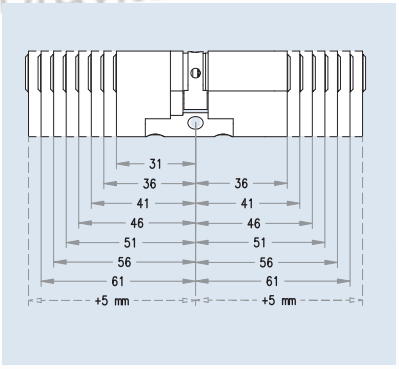

Ordering information

- DZ cylinder length A/B, [finish] BSZ



KZS – special drilling and pulling protection

Plug pulling with special tools is prevented by special hard metal pins. Increased drilling protection is also provided. KZS protects against visible opening methods and exceeds the protective goals of norms.

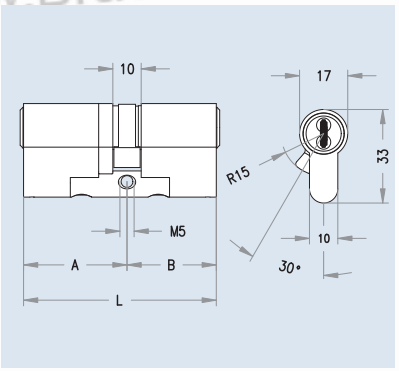

Ordering information

- DZ cylinder length A/B, [finish] KZS-.– KSZ-ES (one sided, with symmetric cylinders)
  - – KZS-BS (both sides)
  - – KZS-KS (short cylinder side)
  - – KZS-LS (long cylinder side)



SSW – Protection mechanism against dust and weathering influences (dust cover)

Spring-loaded shutter plates integrated into the cylinder that automatically open or close when the key is inserted or removed.

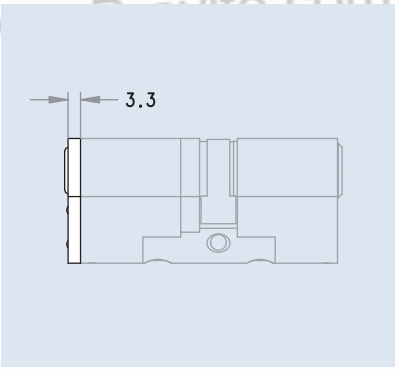

Ordering information

- DZ cylinder length A/B, [finish]
  - – SSW-BS (both sides)
  - – SSW-ES (one sided, with symmetric cylinders)
  - – SSW-KS (short side)
  - – SSW-LS (long side)

www.Bravite.com

Double cylinder DZ | Options



SEW Seawater resistant model
For cylinders exposed to more severe environmental influences. Corrosion-susceptible cylinder parts are provided with a special surface treatment.

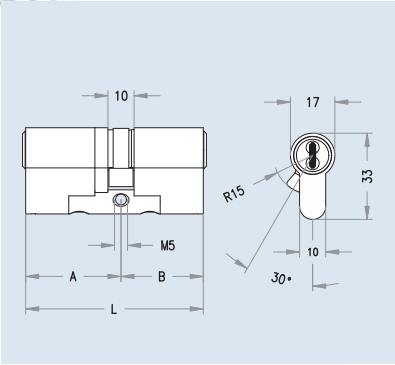

Ordering information
- DZ cylinder length A/B, [finish]
  SEW



VdS–cylinder
VdS-certified cylinder for installation in security endangered areas.
Increased resistance to visible and non-visible opening techniques.
VdS cylinders are manufactured according to the currently valid VdS guidelines.



Ordering information
- DZ cylinder length A/B, [finish]
  VdS

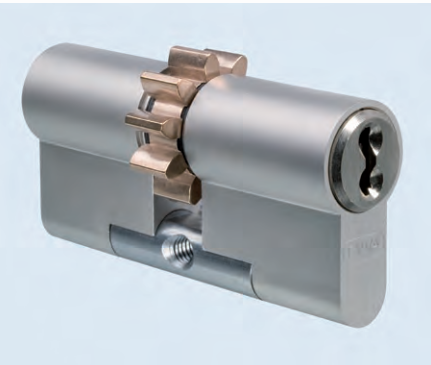

ZR10 cogwheel
(10 teeth)
The cylinder is prepared for multi-point locks or special mortise locks that are activated by way of a gear ring or a toothed rack.

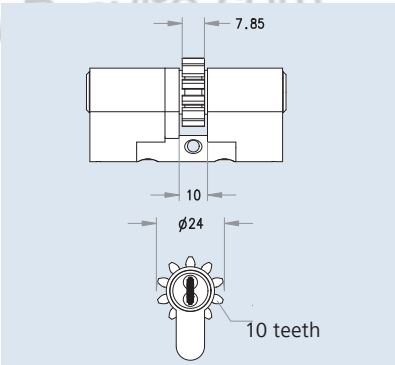

Ordering information
- DZ cylinder length A/B, [finish] ZR10

www.Bravite.com

Double cylinder DZ | Options



ZR18 cogwheel
(18 teeth)
The cylinder is prepared for multi-point locks or special mortise locks that are activated by way of a gear ring or a toothed rack.

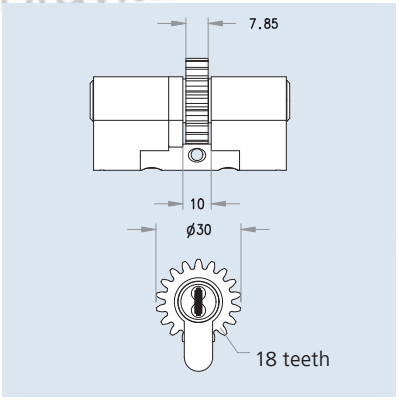

Ordering information
- DZ cylinder length A/B, [finish] ZR18



Double cam BIF
The cylinder is prepared for manufacturer-specified locks in a Biffar door.

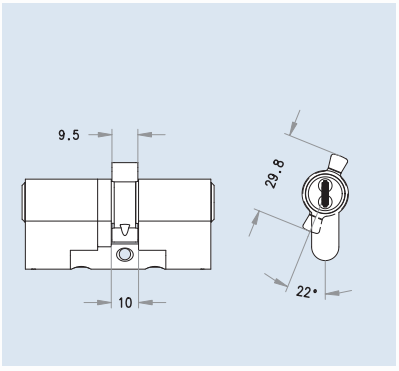

Ordering information
- DZ cylinder length A/B, [finish] BIF
- 22 degree lock cam position, from short cylinder side
- Please observe the door manufacturer's instructions!



STEN star cam
The cylinder is prepared for ABUS type PR1500, PR1600 bar locks.

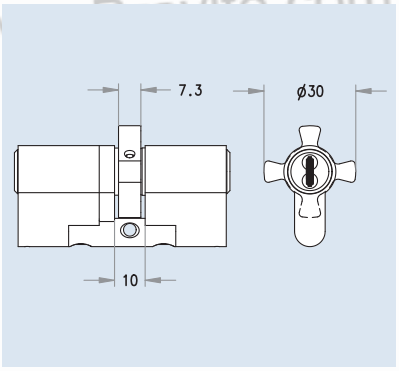

Ordering information
- DZ cylinder length A/B, [finish] STEN

www.Bravite.com

Double cylinder DZ | Options



Construction keying – VAR
If an authorised key is lost or stolen, the cylinder can be mechanically recoded with the Vario B key in such a manner that the lost/stolen key cannot operate the cylinder anymore.

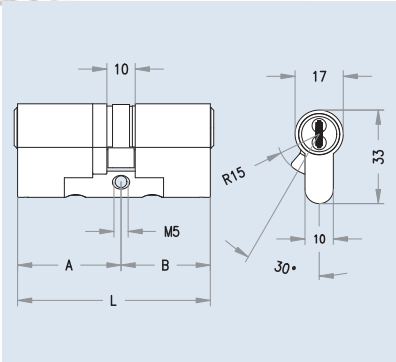

Ordering information
- DZ cylinder length A/B, [finish] Vario



GEFE – emergency key feature
A special emergency key can operate the cylinder even when an authorised key is inserted in the opposite side.

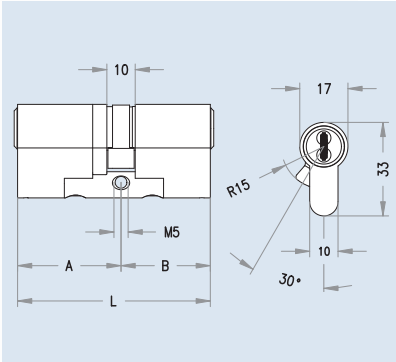

Ordering information
- DZ cylinder length A/B, [finish] GEFE



Double cylinder with shortened body
Cylinder with shortened body, also for use in special metal-frame doors with integrated security rose.

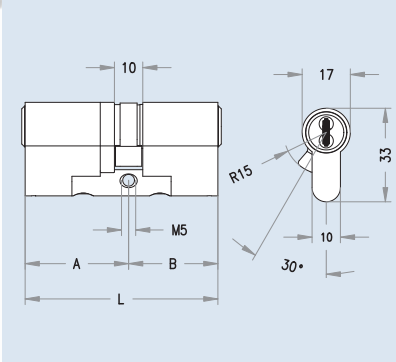

Ordering information
- DZ cylinder length A/B, [finish] ZVS-(ES/LS/KS)
- ZVS-ES (one sided, with symmetric cylinders)
- ZVS-LS (long cylinder side)
- ZVS-KS (short cylinder side)

www.Bravite.com

Product catalogue, Release 01/10/2009
Errors and misprints excepted. Subject to technical change without notice.

Double cylinder DZ | Options



PA partner cylinder
The cylinder can only be operated when an authorised key is inserted in the opposite side.

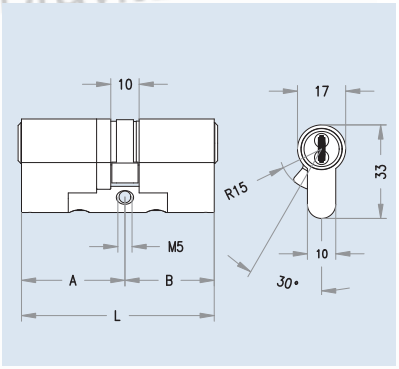

Ordering information
- DZ cylinder lengths A/B, [finish] PA

www.Bravite.com



USH different locking hierarchy
The cylinder has different A/B hierarchic authorisation levels, e.g. the outside can only be operated by a super-ordinate key, the inside operates with any authorised key.

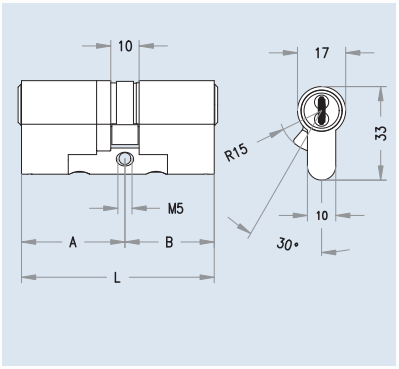

Ordering information
- DZ cylinder length A/B, [finish] USH;
- Specification of hierarchic authorisations per cylinder side (A/B)



Double cylinder with free-wheel function FL2
Cylinder with 360 degree free-wheeling cam when key is not inserted. Coupling engaged when key tip is inserted.

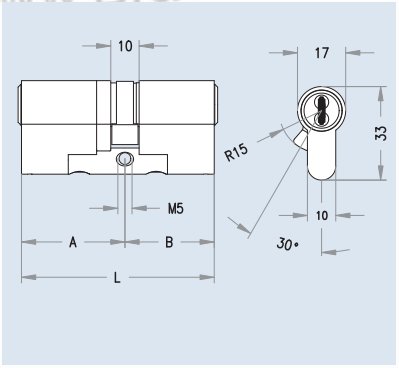

Ordering information
- DZ cylinder length A/B, [finish], FL2

www.Bravite.com

3KSplus
3-curve system

Double cylinder DZ | Options



Double cylinder with free-wheel function and positive decoupling
Locking cylinder with 360 degree free-wheeling and positive-action decoupling of the cam. Coupling engaged when the key tip is inserted.
Special cam shape.
Suitable for geared-lock anti-panic multiple latching.

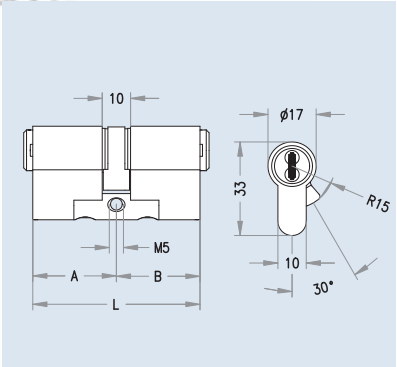

Ordering information

- DZ cylinder length A/B, [finish]
  FZG

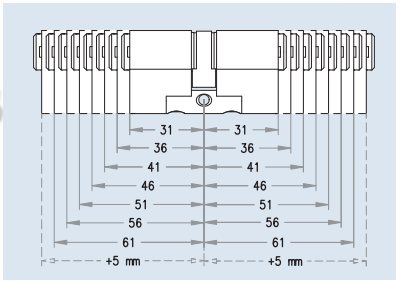

Options overview
ARS possible only in compact design
Vario possible only in compact design
S = Standard
● simple combination possible

		BSZ	KZS	SSW	SEW	ARS	VDS	NS	ZR10	ZR18	BIF	STEN	VAR	GEFE	SOS	HOTE	ZVS	PA	USH	FL2	DUP
		external key override	plug pulling protection	dust cover	sea water resistant	protection against breaking off	certified cylinder acc to VdS	wear resistance	cog wheel 10 teeth	cog wheel 18 teeth	double cam Biffar	star cam	construction keying	emergency function	priority function	Hotel function	shortened body	partner function	different locking hierarchy	free wheel cam	four-eyes principle
external key override	BSZ	-	-	-	-	-	-	-	-	-	-	-	-	-	-	-	-	-	-	-	-
plug pulling protection	KZS	-	-	-	●	●	S	●	●	●	●	●	●	-	●	-	●	-	-	-	●
dust cover	SSW	-	-	-	●	●	●	●	●	●	●	●	●	-	●	-	-	-	-	-	●
sea water resistant	SEW	-	●	●	-	●	●	●	●	●	●	●	●	-	●	-	●	-	-	-	●
protection against breaking off	ARS	-	●	●	●	-	S	●	-	-	-	-	●	-	●	-	●	-	-	-	●
certified cylinder acc to VdS	VDS	-	S	●	●	S	-	●	●	●	●	●	-	-	-	-	-	-	-	-	-
wear resistance	NS	-	●	●	●	●	●	-	●	●	●	●	●	-	●	-	●	-	-	-	●
cog wheel 10 teeth	ZR10	-	●	●	●	-	●	●	-	-	-	-	●	-	●	-	●	-	-	-	●
cog wheel 18 teeth	ZR18	-	●	●	●	-	●	●	-	-	-	-	●	-	●	-	●	-	-	-	●
double cam Biffar	BIF	-	●	●	●	-	●	●	-	-	-	-	●	-	●	-	●	-	-	-	●
star cam	STEN	-	●	●	●	-	●	●	-	-	-	-	●	-	●	-	●	-	-	-	●
construction keying	VAR	-	●	●	●	●	-	●	●	●	●	●	-	-	●	-	●	-	-	-	-
emergency function	GEFE	-	-	-	-	-	-	-	-	-	-	-	-	-	-	-	-	-	-	-	-
priority function	SOS	-	●	●	●	●	-	●	●	●	●	●	●	-	-	-	●	-	-	-	●
Hotel function	HOTE	-	-	-	-	-	-	-	-	-	-	-	-	-	-	-	-	-	-	-	-
shortened body	ZVS	-	●	-	●	●	-	●	●	●	●	●	●	-	●	-	-	-	-	-	●
partner function	PA	-	-	-	-	-	-	-	-	-	-	-	-	-	-	-	-	-	-	-	-
different locking hierarchy	USH	-	-	-	-	-	-	-	-	-	-	-	-	-	-	-	-	-	-	-	-
free wheel cam	FL2	-	-	-	-	-	-	-	-	-	-	-	-	-	-	-	-	-	-	-	-
four-eyes principle	DUP	-	●	●	●	●	-	●	●	●	●	●	-	-	●	-	●	-	-	-	-

www.Bravite.com

Product catalogue, Release 01/10/2009
Errors and misprints excepted. Subject to technical change without notice.

Double cylinder DZ | Options



Double cylinder, one side slot
Is operable from one side with an authorised key and from the Flex side operable with a flat object.
Cam movement is 360 degrees and 30 degree cam removal position (from the short side).

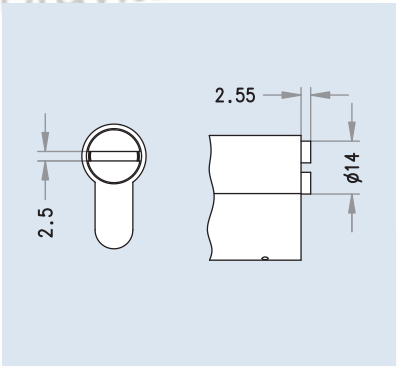

Ordering information
- DZ cylinder length A/B, [finish] Flex S-(ES/LS/KS)
- Flex S-ES (one sided, with symmetric cylinders)
- Flex S-LS (long cylinder side)
- Flex S-KS (short cylinder side)

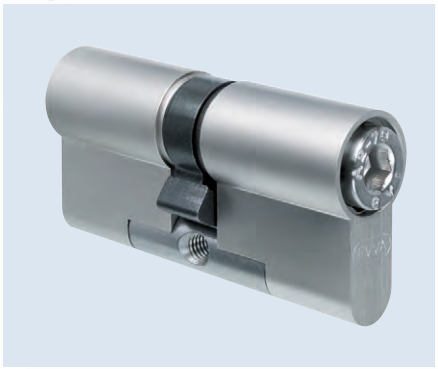

Double cylinder, one side Allen socket
Is operable from one side with an authorised key and from the Flex side operable with a SW6 Allen wrench.
Cam movement is 360 degrees and 30 degree cam removal position (from the short side)

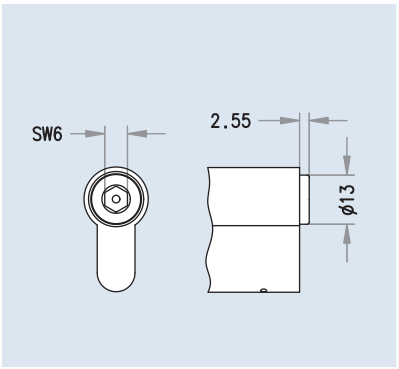

Ordering information
- DZ cylinder length A/B, [finish] (ES/LS/KS) [security, application and convenience options]
- Flex I6-ES
- Flex I6-LS
- Flex I6-KS



Double cylinder, one side square plug
Is operable from one side with an authorised key and from the Flex side operable with an 8 mm square wrench.
Cam movement is 360 degrees and 30 degree cam removal position (from the short side).

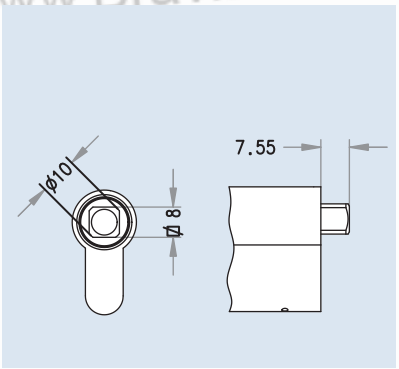

Ordering information
- DZ cylinder length A/B, [finish] (ES/LS/KS) [security, application and convenience options]
- Flex 4K-ES
- Flex 4K-LS
- Flex 4K-KS

www.Bravite.com

Double cylinder DZ | Options



Ordering information

- DZ cylinder length A/B, [finsih] (ES/LS/KS) [security, application and convenience options]
- Flex D8-ES
- Flex D8-LS
- Flex D8-KS

Double cylinder, one side 8 mm three-square plug

Is operable from one side with an authorised key and from the Flex side operable with an 8 mm three-square wrench.
Cam movement is 360 degrees and 30 degree cam removal position (from the short side)

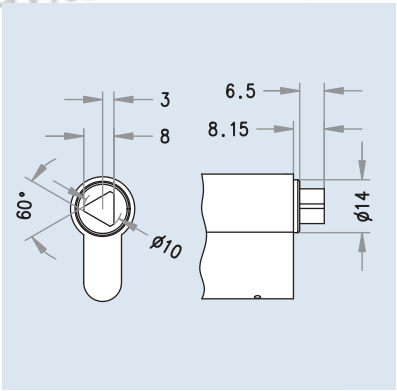



Ordering information

- DZ cylinder length A/B, [finsh] (ES/LS/KS) [security, application and convenience options]
- Flex D11-ES
- Flex D11-LS
- Flex D11-KS

Double cylinder, one side 11 mm three-square plug

Is operable from one side with an authorised key
Flex side operable with an 11 mm three-square socket
360 degree cam movement
Cam removal position, 30 degrees (from the short side)

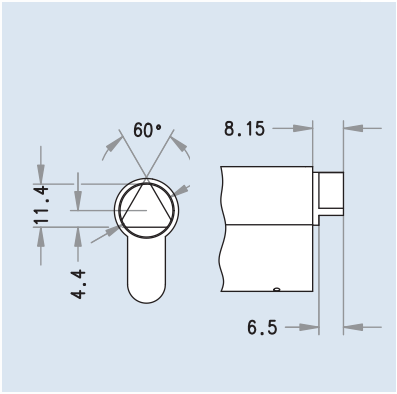



Ordering information

- DZ cylinder length A/B, [finsh] (ES/LS/KS) [security, application and convenience options]
- Flex D14-ES
- Flex D14-LS
- Flex D14-KS

Double cylinder, one side 14 mm three-square plug

operable from one side with an authorised key
Flex side operable with an 14 mm three-square socket
360 degree cam movement
cam removal position, 30 degrees (from the short side)

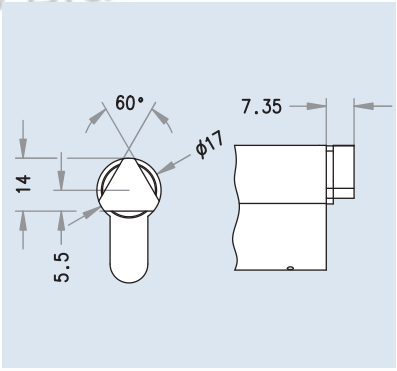

www.Bravite.com

Product catalogue, Release 01/10/2009
Errors and misprints excepted. Subject to technical change without notice.

Double cylinder DZ | Options



Ordering information

- DZ cylinder length A/B, [finish], Flex BL-(ES/LS/KS)
- Flex BL-ES (one sided, with symmetric cylinders)
- Flex BL-LS (long cylinder side)
- Flex BL-KS (short cylinder side)

Double cylinder, one side blind

Is operable from one side with an authorised key
other cylinder side blind, no operation possible
360 degree cam movement
cam removal position, 30 degrees (from the short side)

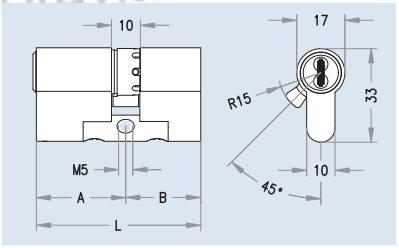

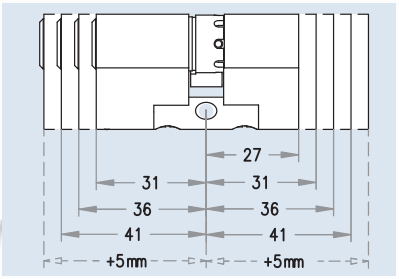



Ordering information

- DZ cylinder length A/B, [finish], BLIND

Double cylinder, both sides blind

Cylinder both sides blind, prevents operation of the mortise lock
for doors that must not be locked but the Profile cylinder aperture must be closed

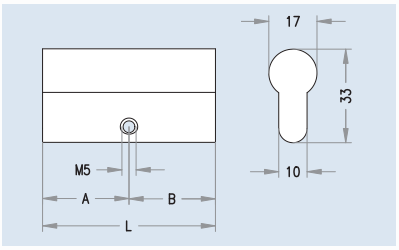

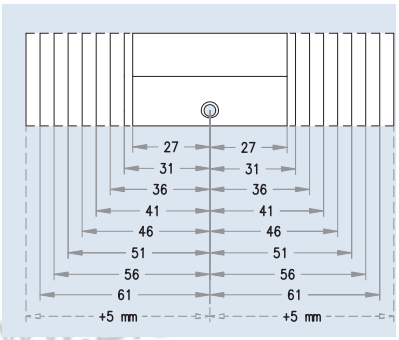

www.Bravite.com

KZ thumbturn cylinder



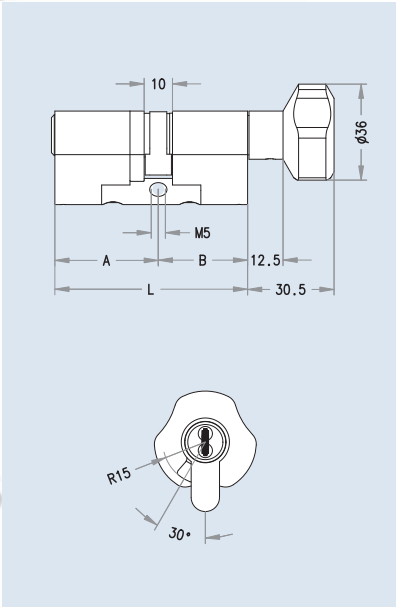

Ordering information

- KZ cylinder length A/B (A=outer side; B=inner side (thumbturn side)) [security and usage options]
- [finish]/[thumbturn design]
- when thumbturn design is not specified: standard AKN thumbturn

Applications and usage

- for mortise locks per DIN or ÖNORM
- for mortise locks per harmonised European norms
- for house doors, connecting doors, flat entry doors, security doors, metal frame doors, ...
- for break-in resistant doors of resistance class Wz6

Functional characteristics

- cylinder is operable from the outside with a key
- thumbturn on the inside to lock and unlock the door
- 360 degree cam movement

Security features

- hard metal drilling protection for the outside plug and housing
- pulling protection through chrome/ nickel connection rod
- vertical key insertion for optimal scan of locking elements

Technical data

- cylinder housing: base material, brass
- cylinder plug: base material, nickel-silver
- all scanning elements coated with Triflon
- cam base position, 30 degrees
- cam width 9.3 mm
- modular cylinder structure
- Designs: satin nickel-plated, satin brushed, polished lacquer

Included in delivery

- locking cylinder with thumbturn and fastening screw

Assembly & operation

- easy cylinder installation in a prepared, empty cylinder opening
- cylinder overhang may not exceed 3 mm for security-relevant doors
- if necessary, inside thumbturn can be removed with a tool
- cylinder fixation via a M5 fastener bore hole

Cylinder lengths

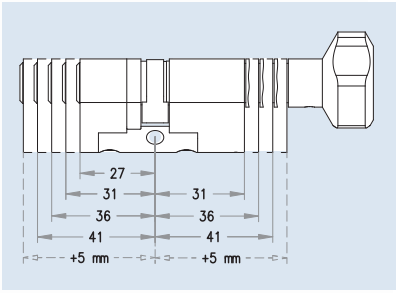

Finishes

Finishes	Abbreviations	Cylinder	AKN, KKN, FKN	RKN, MKN	OKN, OKNA	GKN
Polished brass lacquered	MP	●	●	●	●	●
Satin nickel	NI	●	●	●	●	●
Polished nickel	NP	○	○	○	○	○
Satin chrome	CR	○	○	○	○	○
Polished chrome	CP	○	○	○	○	○
Patinated black	PS	○	○	○	○	○
Patinated brown	PB	○	○	○	○	○
Satin brass	MS	○	○	○	○	○
PVD coated	PVD-MS	○	○	○		○
RAL colour	RAL					○

www.Bravite.com

Product catalogue, Release 01/10/2009
Errors and misprints excepted. Subject to technical change without notice.

AKN standard thumbturn

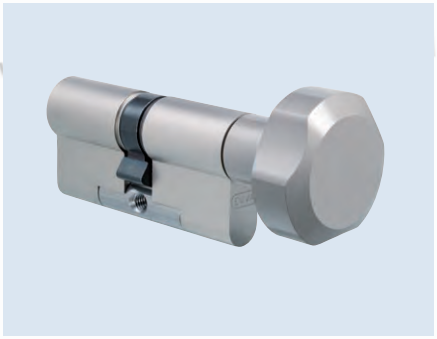

Ordering information
- KZ cylinder length A/B (A=outer side; B=inner side (thumbturn side)) [security and usage options]
- [finish]/AKN

- **Functional characteristics**
  - removable thumbturn with three grip recesses
- **Technical data**
  - base material: brass
  - Finish: satin nickel-plated, satin brushed, polished lacquer

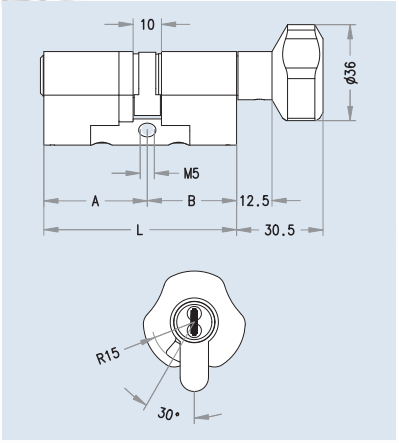

KKN conical thumbturn

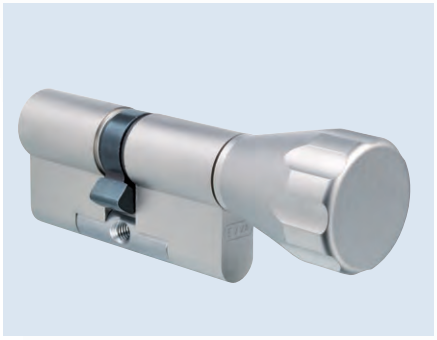

Ordering information
- KZ cylinder length A/B (A=outer side; B=inner side (thumbturn side)) [security and usage options]
- [finish]/KKN

- **Functional characteristics**
  - removable, cone-shaped thumbturn with grip recesses
- **Technical data**
  - base material: brass
  - Finish: satin nickel-plated, satin brushed, polished lacquer

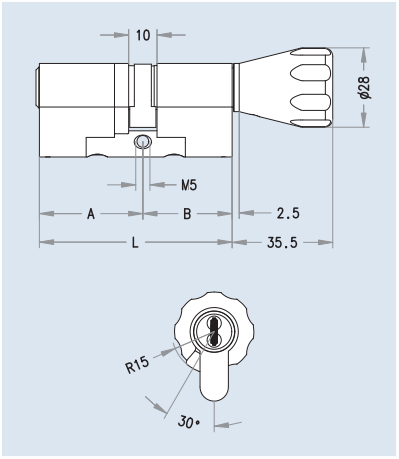

RKN round thumbturn

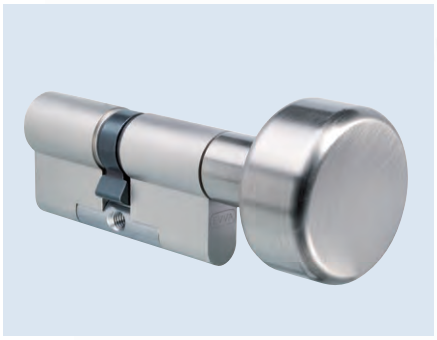

Ordering information
- KZ cylinder length A/B (A=outer side; B=inner side (thumbturn side)) [security and usage options]
- [finish]/RKN

- **Functional characteristics**
  - removable, round thumbturn set off to the rear
- **Technical data**
  - base material: brass
  - Finish: satin nickel-plated, satinbrushed, polished lacquer

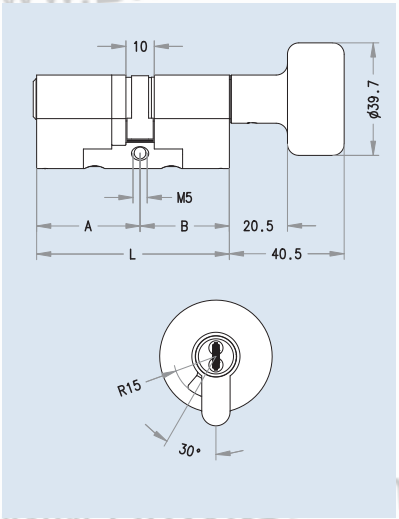

www.Bravite.com

MKN knurled metal thumbturn

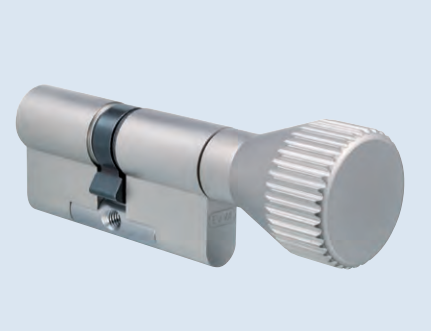

Ordering information
- KZ cylinder length A/B (A=outer side; B=inner side (thumbturn side)) [security and usage options]
- [finish]/MKN

Functional characteristics
- removable, knurled thumbturn with medium-sized serrations

Technical data
- base material: brass
- Finish: satin nickel-plated, satin brushed, polished lacquer

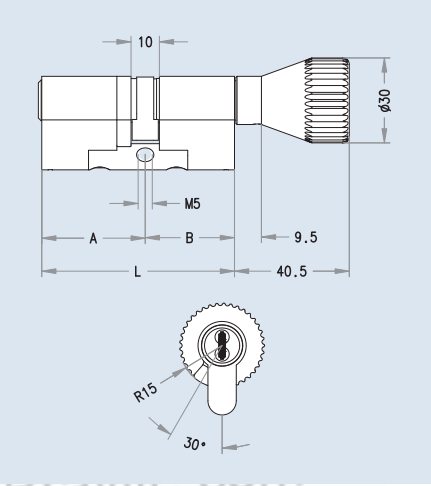

GKN recessed grip thumbturn

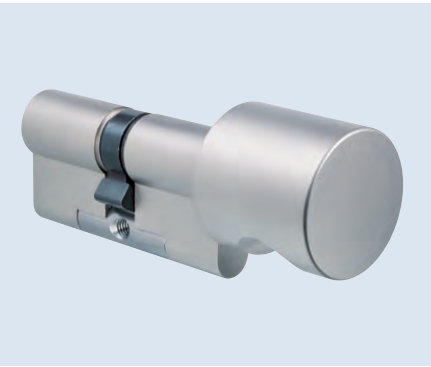

Ordering information
- KZ cylinder length A/B (A=outer side; B=inner side (thumbturn side)) [security and usage options]
- [finish]/GKN

Functional characteristics
- removable, round thumbturn set off to the rear

Technical data
- base material: brass
- Finish: satin nickel-plated, satin brushed, polished lacquer
- or lacquered in RAL colours: blue RAL5002; dark green RAL6012; yellow RAL1004; green RAL6001; grey RAL7038; red RAL3003; black RAL9005; white RAL 9010; other RAL colours on request

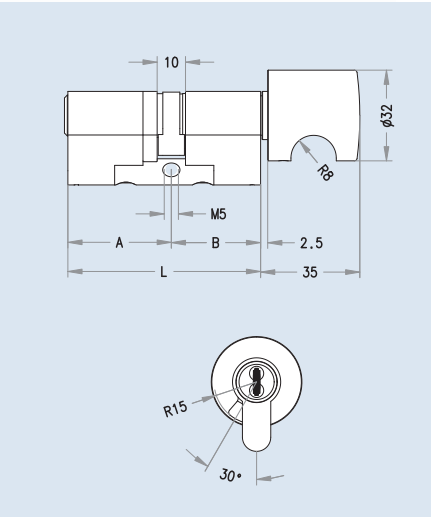

FKN flat thumbturn



Ordering information
- KZ cylinder length A/B (A=outer side; B=inner side (thumbturn side)) [security and usage options]
- [finish]/FKN

Functional characteristics
- removable, stylishly shaped, flat thumbturn with 2 grip recesses
- particularly suitable for elderly persons and people with disabilities

Technical data
- base material: brass
- Finish: satin nickel-plated, satin brushed, polished lacquer

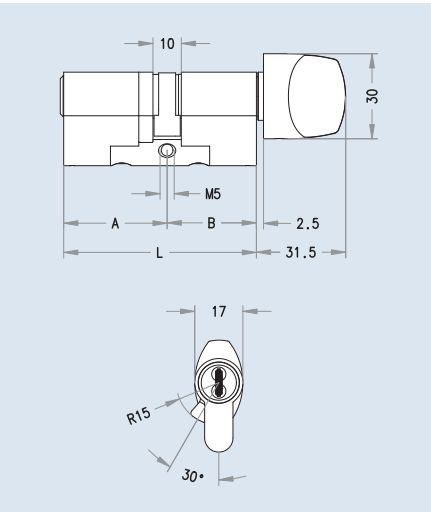

www.Bravite.com

OKN oval thumbturn

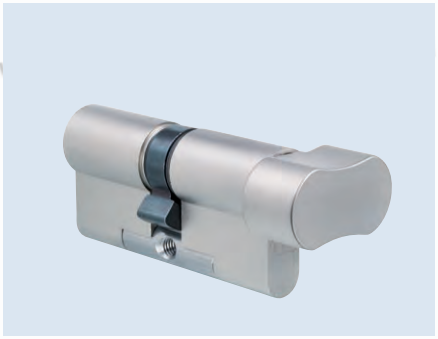

Ordering information

- KZ cylinder length A/B (A=outer side; B=inner side (thumbturn side)) [security and usage options]
- [finish]/OKN

Functional characteristics

- removable, horizontal, light metal thumbturn with two grip recesses

Technical data

- base material: aluminium
- Finish: satin nickel-plated, F2 anodized, F3 anodized, polished gold colour

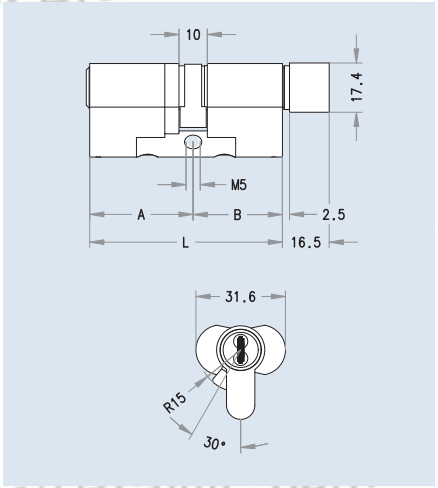

OKNA asymmetric oval thumbturn

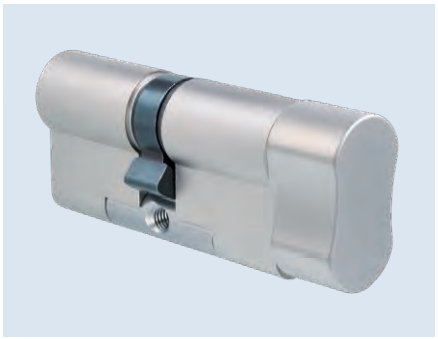

Ordering information

- KZ cylinder length A/B (A=outer side; B=inner side (thumbturn side)) [security and usage options]
- [finish]/OKNA

Functional characteristics

- removable, vertical, light metal thumbturn with two grip recesses

Technical data

- base material: aluminium
- Finish: satin nickel-plated, F2 anodized, F3 anodized, polished gold colour

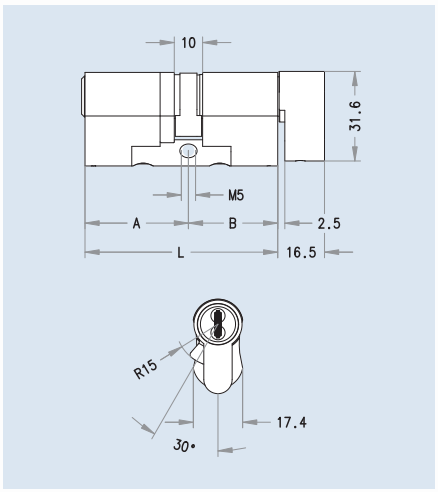

Thumbturn | Options



Ordering information

- KZ cylinder length A/B, CLASS (A=outer side; B=inner side (thumbturn side)
- [finish)/[thumbturn design]
- when thumbturn design is not specified: standard AKN thumbturn

Thumbturn cylinder with classroom function

The thumbturn side (inside area) can only be unlocked. Locking from the inside (e.g. class rooms) is not possible. In addition the key side always has priority function. Thus the cylinder can also be operated from the outside e.g. when the thumbturn is held from the inside.

Assembly & operation

- easy cylinder installation in applicable cylinder recess
- adjustable for left/right doors
- cylinder fixation by means of a fixing borehole M5

www.Bravite.com

3KSplus
3-curve system

Thumbturn cylinder | Options



Thumbturn cylinder with SOS function
The key-operated cylinder side is equipped with a priority function. Even when manipulated (e.g. when the inside thumbturn is prevented from turning) the cylinder can be operated from the outside.

Other options
see DZ options

Ordering information
- cylinder length A/B, SOS (A=outer side; B=inner side (thumbturn side)
- [Finish]/[thumbturn design]
- when thumbturn design is not specified: standard AKN thumbturn

Options overview
ARS possible only in compact design,
VAR possible only in compact design,
S = Standard
● simple combination possible

		BSZ	KZS	SSW	SEW	ARS	VDS	NS	ZR10	ZR18	BIF	STEN	VAR	GEFE	SOS	HOTE	ZVS	PA	USH	FREI	DUP
external key override	BSZ	-	-	-	-	-	-	-	-	-	-	-	-	-	-	-	-	-	-	-	-
plug pulling protection	KZS	-	-	-	●	-	S	S	●	●	●	●	●	-	●	-	●	-	-	-	-
dust cover	SSW	-	-	-	●	-	●	S	●	●	●	●	●	-	●	-	-	-	-	-	-
sea water resistant	SEW	-	●	●	-	-	●	S	●	●	●	●	●	-	●	-	●	-	-	-	-
protection against breaking off	ARS	-	-	-	-	-	-	-	-	-	-	-	-	-	-	-	-	-	-	-	-
certified cylinder acc to VdS	VDS	-	S	-	●	-	-	S	●	●	●	●	-	-	-	-	-	-	-	-	-
wear resistance	NS	-	S	S	S	-	S	-	S	S	S	S	S	-	S	-	S	-	-	-	-
cog wheel 10 teeth	ZR10	-	●	●	●	-	●	S	-	-	-	-	●	-	●	-	●	-	-	-	-
cog wheel 18 teeth	ZR18	-	●	●	●	-	●	S	-	-	-	-	●	-	●	-	●	-	-	-	-
double cam Biffar	BIF	-	●	●	●	-	●	S	-	-	-	-	●	-	●	-	●	-	-	-	-
star cam	STEN	-	●	●	●	-	●	S	-	-	-	-	●	-	●	-	●	-	-	-	-
construction keying	VAR	-	●	●	●	-	-	S	●	●	●	●	-	-	-	-	●	-	-	-	-
emergency function	GEFE	-	-	-	-	-	-	-	-	-	-	-	-	-	-	-	-	-	-	-	-
priority function	SOS	-	●	●	●	-	-	S	●	●	●	●	-	-	-	-	●	-	-	-	-
Hotel function	HOTE	-	-	-	-	-	-	-	-	-	-	-	-	-	-	-	-	-	-	-	-
shortened body	ZVS	-	●	-	●	-	-	S	●	●	●	●	●	-	●	-	-	-	-	-	-
partner function	PA	-	-	-	-	-	-	-	-	-	-	-	-	-	-	-	-	-	-	-	-
different locking hierarchy	USH	-	-	-	-	-	-	-	-	-	-	-	-	-	-	-	-	-	-	-	-
Free wheel cam	FREI	-	-	-	-	-	-	-	-	-	-	-	-	-	-	-	-	-	-	-	-
four-eyes principle	DUP	-	-	-	-	-	-	-	-	-	-	-	-	-	-	-	-	-	-	-	-

www.Bravite.com

HZ half cylinder



Ordering information

- HZ cylinder length A, [finish], [security and usage options]

Applications and usage

- for one or more turn mortise locks and other diverse locks
- key switch
- switch arming features
- garage doors and roll-up doors fastened at the side

Functional characteristics

- operable with key from one side
- 360 degree cam movement
- 45 degree cam removal position
- 8 setting positions for cam (45°, 90°,135°, 180°, 225°, 270°, 315°, 360°)

Security features

- hard metal drill protection in plug and housing
- pulling protection through chrome/ nickel connecting rod

Technical data

- cylinder housing: base material, brass
- cylinder plug: base material, brass
- all scanning elements coated with Triflon
- cam base position 45 degrees (changeable)
- cam width 9.3 mm
- modular cylinder structure

Included in delivery

half cylinder with fastening screw

Assembly & operation

- easy cylinder installation in a prepared, empty cylinder aperture
- cylinder should be flush with the fitting or rose
- cylinder fixation via a M5 fastener bore hole

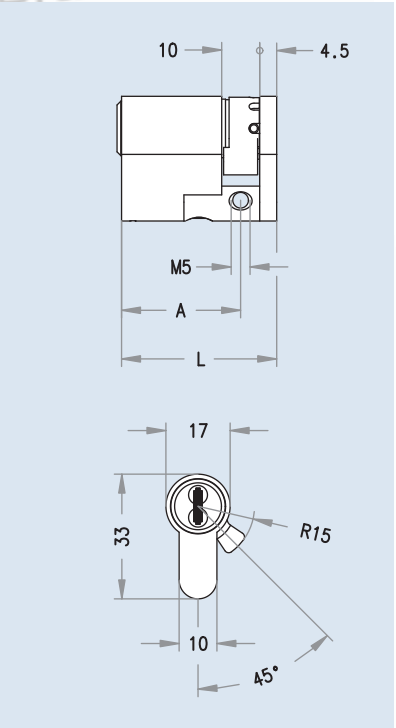

Cylinder lengths

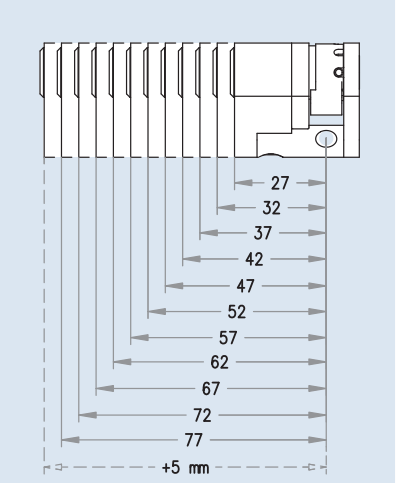

Finishes

Finishes	Abbreviations	Standard	Surcharge
Polished brass lacquered	MP	●	
Satin nickel	NI	●	
Polished nickel	NP		O
Satin chrome	CR		O
Polished chrome	CP		O
Patinated black	PS		O
Patinated brown	PB		O
Satin brass	MS		O
PVD coated	PVD-MS		O

www.Bravite.com

3KSplus
3-curve system

HZ/S half cylinder



Ordering information

- HZ/S cylinder length A, [finish], [security and usage options]

Applications and usage

- key switch
- switch arming features
- garage doors, roll-up doors, lifts, escalators where fastening is from behind

Functional characteristics

- operable with key from one side
- 360 degree cam movement
- 30 degree cam removal position
- 8 setting positions for cam (45°, 90°,135°, 180°, 225°, 270°, 315°, 360°)
- can be fastened by 2, M4 threaded holes at the rear side
- can be fastened through 1, M5 threaded hole at the side

Security features

- hard metal drill protection in plug and housing
- pulling protection through chrome/ nickel connecting rod

Technical data

- cylinder housing: base material, brass
- cylinder plug: base material, nickel-silver
- all scanning elements coated with Triflon
- cam base position 45 degrees (changeable)
- cam width 9.3 mm
- modular cylinder structure

Included in delivery

half cylinder with fastening screw

Assembly & operation

- easy cylinder installation in a prepared, empty cylinder aperture
- cylinder should be flush with the fitting or rose
- cylinder fixation via a M5 fastener bore hole (at the side)
- cylinder fixation via 2 rear-side, M4 bore holes

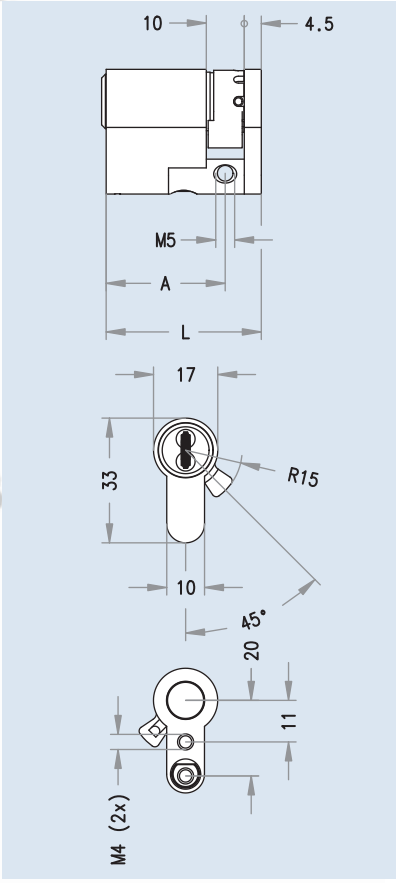

Cylinder lengths

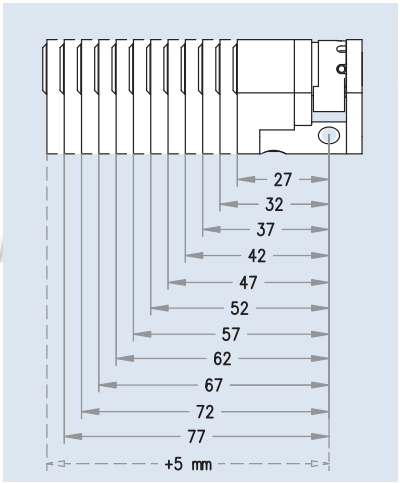

Finishes

Finishes	Abbreviations	Standard	Surcharge
Polished brass lacquered	MP	●	
Satin nickel	NI	●	
Polished nickel	NP		O
Satin chrome	CR		O
Polished chrome	CP		O
Patinated black	PS		O
Patinated brown	PB		O
Satin brass	MS		O
PVD coated	PVD-MS		O

www.Bravite.com

Product catalogue, Release 01/10/2009
Errors and misprints excepted. Subject to technical change without notice.

RDZ round double cylinder



Ordering information

- RDZ cylinder length A/B [finish] [security and usage options]

Applications and usage

- for mortise locks intended for round-profile cylinders
- for house doors, connecting doors, flat entry doors, security doors, metal frame doors, ...

Functional characteristics

- lockable from both sides with key
- 360 degree cam movement
- cam removal position, 22.5 degrees (from the short side)

Security features

- hard metal drilling protection in plug
- vertical key insertion for optimal scan of locking components

Technical data

- cylinder housing: base material, brass
- cylinder plug: base material, brass
- all scanning elements coated with Triflon
- cam base position 22.5 degrees
- cam width 9.3 mm
- compact design

Included in delivery

locking cylinder with fastening screw

Assembly & operation

- easy cylinder installation in a prepared, empty cylinder aperture
- cylinder overhang may not exceed 3 mm for security-relevant doors
- cylinder fixation via a M5 fastener bore hole

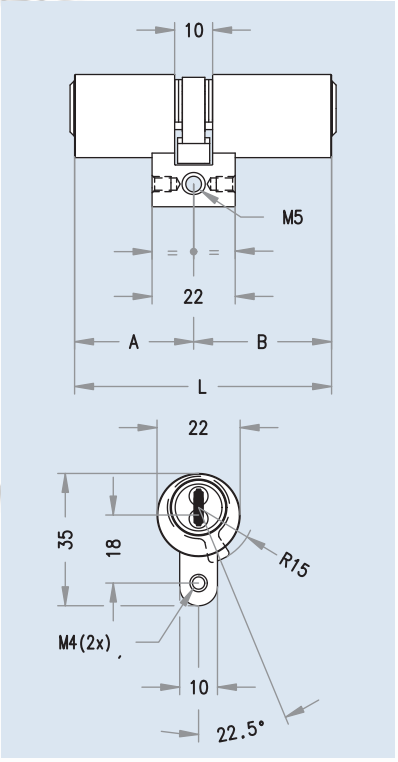

Cylinder lengths

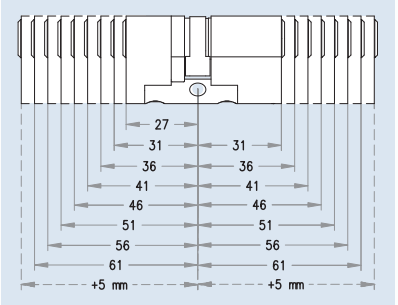

Finishes

Finishes	Abbreviations	Standard	Surcharge
Polished brass lacquered	MP	●	
Satin nickel	NI	●	
Polished nickel	NP		O
Satin chrome	CR		O
Polished chrome	CP		O
Patinated black	PS		O
Patinated brown	PB		O
Satin brass	MS		O
PVD coated	PVD-MS		O

www.Bravite.com

3KSplus
3-curve system

RKZ round thumbturn cylinder



Ordering information
RKZ cylinder length A/B (A=outer side; B=inner side (thumbturn), [finish], [security and usage options] when thumbturn design is not specified: standard AKN knob

Applications and usage
- for mortise locks intended for round-profile cylinders
- for house doors, connecting doors, flat entry doors, security doors, metal frame doors, ...

Functional characteristics
- lock is operable from the outside with a key
- thumbturn on the inside to lock and unlock the door
- 360 degree cam movement

Security features
- hard metal drilling protection for the outside plug and housing
- vertical key insertion for optimal scan of locking components

Technical data
- cylinder housing: base material, brass
- cylinder plug: base material, brass
- all scanning elements coated with Triflon
- cam base position 22.5 degrees
- cam width 9.3 mm
- compact cylinder design

Included in delivery
locking cylinder with thumbturn and fastening screw

Assembly & operation
- easy cylinder installation in a prepared, empty cylinder aperture
- cylinder overhang may not exceed 3 mm for security-relevant doors
- if necessary, inside thumbturn can be removed with a tool
- cylinder fixation via a M5 fastener bore hole

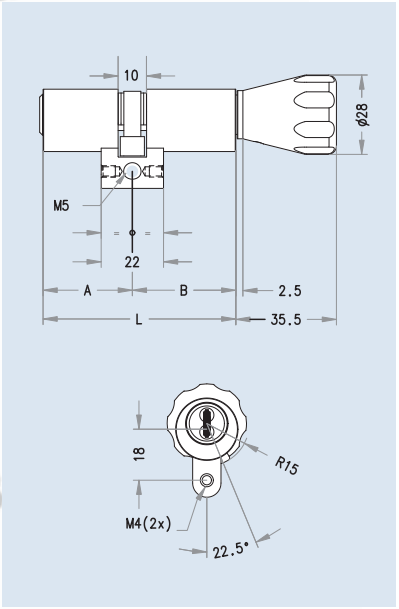

Cylinder lengths

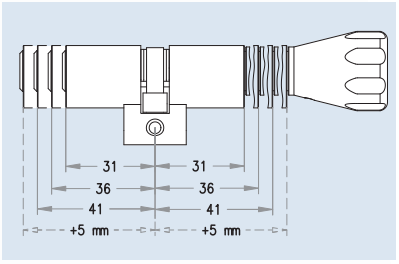

Finishes

Finishes	Abbreviations	Cylinder	AKN, KKN, FKN	RKN, MKN	OKN, OKNA	GKN
Polished brass lacquered	MP	●	●	●	●	●
Satin nickel	NI	●	●	●	●	●
Polished nickel	NP	O	O	O	O	O
Satin chrome	CR	O	O	O	O	O
Polished chrome	CP	O	O	O	O	O
Patinated black	PS	O	O	O	O	O
Patinated brown	PB	O	O	O	O	O
Satin brass	MS	O	O	O	O	O
PVD coated	PVD-MS	O	O	O		O
RAL colour	RAL					O

www.Bravite.com

RHZ round half cylinder



Ordering information

- RHZ cylinder length A
  [finish] [security and usage options]

Applications and usage

- for one or more turn mortise locks for round half cylinder
- key switches intended for round half cylinders
- switch arming features
- garage doors, roll-up doors

Functional characteristics

- operable with key from one side
- 360 degree cam movement
- 45 degree cam removal position
- 8 setting positions for cam (45°, 90°,135°, 180°, 225°, 270°, 315°, 360°)

Security features

- hard metal drilling protection in plug

Technical data

- cylinder housing: base material, brass
- cylinder plug: base material, brass
- all scanning elements coated with Triflon
- cam base position 45 degrees (changeable)
- cam width 9.3 mm
- compact cylinder design

Included in delivery

Round half cylinder with fastening cap screw

Assembly & operation

- easy cylinder installation in a prepared, empty cylinder aperture
- cylinder should be flush with the fitting or rose
- cylinder fixation via a M5 fastener bore hole

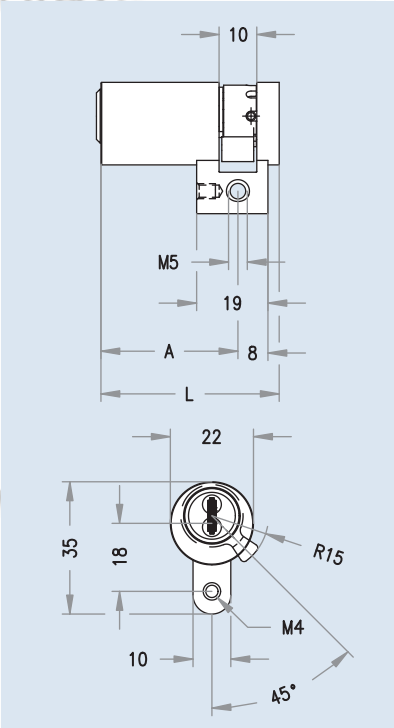

Cylinder lengths

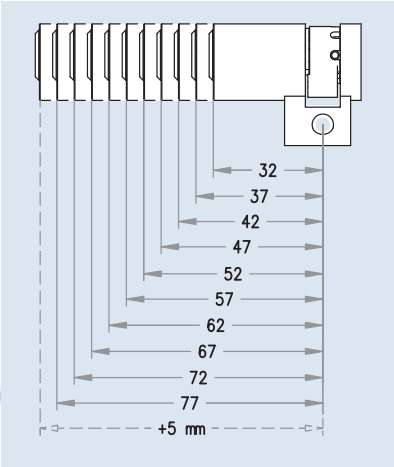

Finishes

Finishes	Abbreviations	Standard	Surcharge
Polished brass lacquered	MP	●	
Satin nickel	NI	●	
Polished nickel	NP		O
Satin chrome	CR		O
Polished chrome	CP		O
Patinated black	PS		O
Patinated brown	PB		O
Satin brass	MS		O
PVD coated	PVD-MS		O

www.Bravite.com

HPM padlock



Ordering information

- HPM (standard: hardened steel shackle)

Applications and usage

- simple doors secured with a hasp
- roll-up blinds
- gate systems
- fastening chains
- security fences

Functional characteristics

- to lock simple mechanisms
- padlock with rounded security shackle
- operated from the bottom side
- 90 degree locking movement
- key removal only possible in closed condition

Security features

- hard metal drill protection in plug and housing
- positively driven locking of the security shackle

Technical data

- padlock, base material brass, satin nickel-plated
- shackle made of hardened, chemically nickel-plated steel or stainless steel
- shackle diameter, 8 mm
- standard shackle: clearance height, 30 mm
  clearance width, 25 mm

Assembly & operation

- for use with any hasp having an eyelet diameter > 8 mm

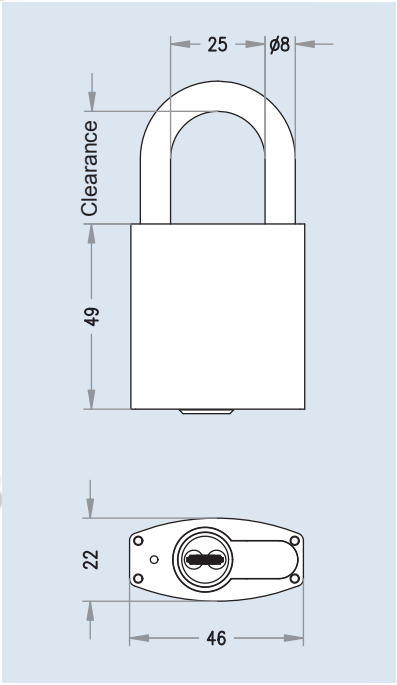

www.Bravite.com

HPM BS padlock



Ordering information

- HPM BS (standard: hardened steel shackle)

Applications and usage

- simple doors secured with a hasp
- roll-up blinds
- gate systems
- fastening chains
- security fences

Functional characteristics

- to lock simple mechanisms
- padlock with rounded security shackle
- operated from the bottom side
- 90 degree locking movement
- key removal only possible in closed condition

Security features

- hard metal drill protection in plug and housing
- positively driven locking of the security shackle
- hardened steel shackle protection

Technical data

- padlock: base material brass, satin nickel-plated
- shackle made of hardened steel, chemically nickel-plated steel
- shackle diameter, 8 mm
- standard shackle: clearance height, 15 mm
  clearance width, 12 mm

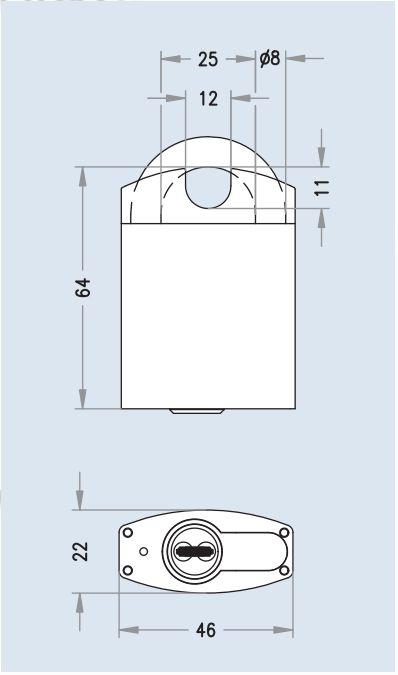

Assembly & operation

- for use with any hasp having an eyelet diameter > 8 mm

www.Bravite.com

HPM SSW padlock with dust cover



Ordering information

- HPM SSW (standard: hardened steel shackle),
- on request, made of stainless steel

Applications and usage

- simple doors secured with a hasp
- roll-up blinds
- gate systems
- fastening chains
- security fences

Functional characteristics

- operated from the bottom side
- 90 degree locking movement
- key removal only possible in closed condition
- with dust cover

Security features

- hard metal drill protection in plug and housing
- positively driven locking of the security shackle

Technical data

- padlock, base material brass, matt nickel-plated
- shackle made of hardened, chemically nickel-plated steel or stainless steel
- shackle diameter, 8 mm
- standard shackle: clearance height, 30 mm
  clearance width, 25 mm
- dust cover

Assembly & operation

- for use with any hasp having an eyelet diameter > 8 mm

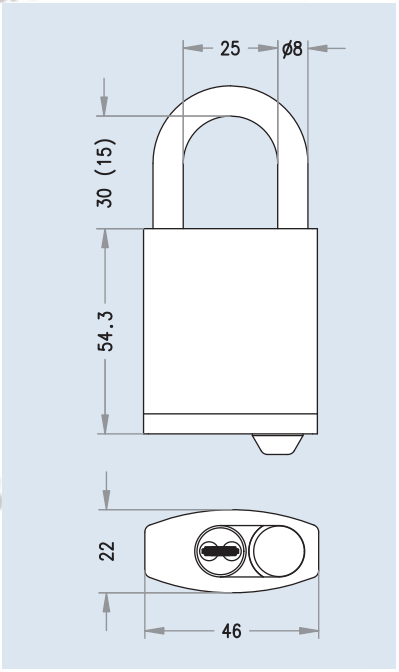

www.Bravite.com

Long shackle HPM padlock



Ordering information

- HPM shackle LH xx (shackle for LH design always stainless steel)
  LH = clearance

Applications and usage

- roll-up blinds
- fastening chains
- security fences

Functional characteristics

- to lock simple mechanisms
- padlock with rounded security shackle
- operated from the bottom side
- 90 degree locking movement
- key removal only possible in closed condition

Security features

- hard metal drill protection in plug and housing
- positively driven locking of the security shackle

Technical data

- padlock, base material brass, matt nickel-plated
- shackle made of hardened, chemically nickel-plated steel or stainless steel
- shackle diameter 8 mm

Assembly & operation

- for use with any hasp having an eyelet diameter > 8 mm

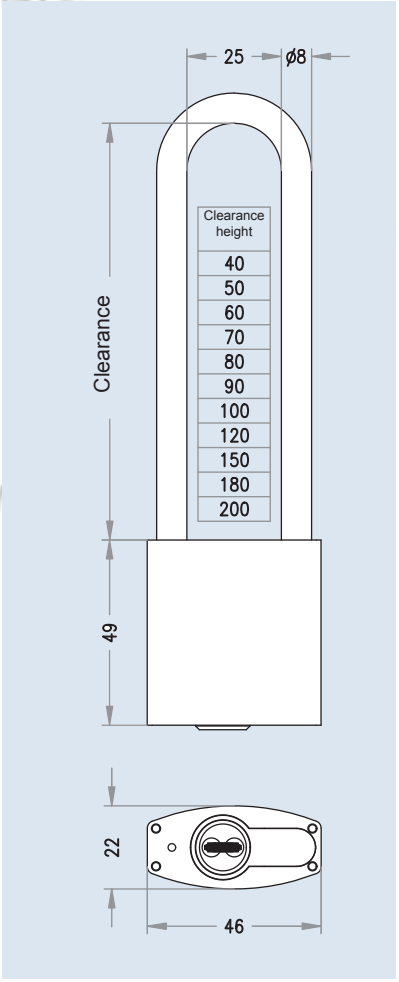

www.Bravite.com

3KSplus
3-curve system

MB19 cam lock



Ordering information
MB19 [finish], [cam], if the standard cam is desired, no further information is necessary

Applications and usage
- wooden and sheet metal boxes
- mailboxes with small cylinder aperture
- showcase locks

Functional characteristics
- locking by cam
- 90 degree locking movement
- key can only be removed in closed condition
- flat side finishes prevent rotation
- rear-side fixation of the cylinder with a hex nut (WS22)
- standard cam, 33.5 mm

Technical data
- cylinder front face Ø, 22 mm
- M19 threads for WS22 fastening nut
- basic material: brass
- steel cam, blue galvanised

Included in delivery
- locking cylinder with 5072 standard cam, 33.5 mm
- M19 fastening nut

Assembly & operation
- for material thickness up to 14 mm
- cylinder aperture Ø 19 flattened to 16 mm
- cam secured by 2 rear-side screws

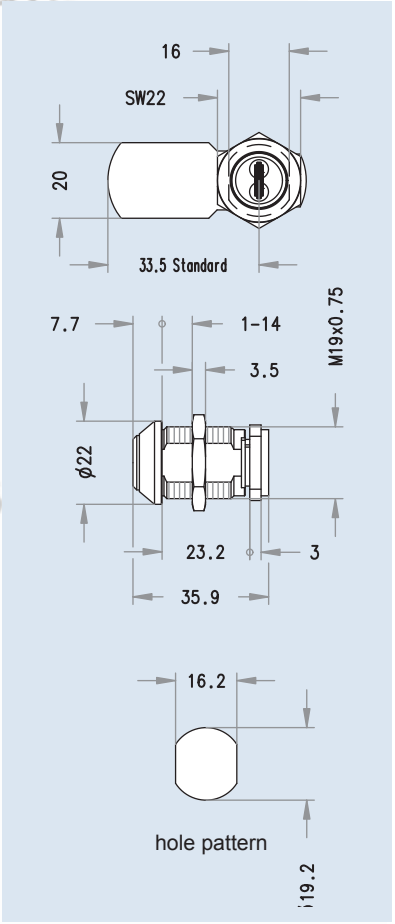

www.Bravite.com

MB19SZ switch cylinder



Ordering information
MB19SZ [finish]

- **Applications and usage**
  - as switch cylinder with integrated switch element
  - for direct activation of circuits
- **Functional characteristics**
  - 90 degree locking movement
  - on/off switch function
  - key removal only possible in one position
- **Technical data**
  - cylinder front face Ø, 22 mm
  - M19 threads for WS22 fastening nut
  - basic material: brass
  - F4 T7 switch element
- **Included in delivery**
  - locking cylinder with switch elements and connecting cable
  - M19 fastening nut
- **Assembly & operation**
  - for material thickness up to 14 mm
  - cylinder aperture Ø 19 flattened to 16 mm
  - electrical connection must be performed by a professional

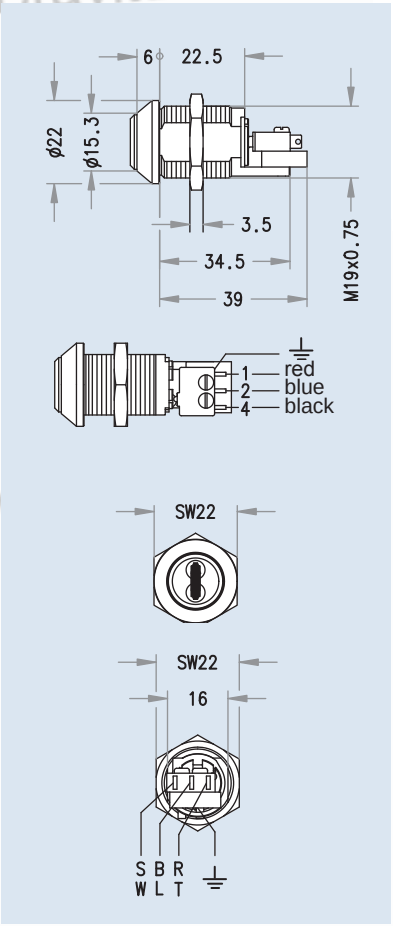

www.Bravite.com

MB23 cam lock



Ordering information
MB23 [finish], [cam], if the standard cam is desired, no further information is necessary

Applications and usage
- wooden and sheet metal boxes
- mailboxes with medium cylinder aperture
- showcase locks
- emergency key boxes
- key boxes
- wardrobe boxes/lockers
- cabinets

Functional characteristics
- locking by cam
- 90 degree locking movement
- key can only be removed in closed condition
- flat side finishes prevent rotation
- rear-side fixation of the cylinder with a hex nut (WS27)
- standard cam, 33.5 mm
- S function (MB23S), key can be removed in either of 2 positions

Security features
- hard metal elements to prevent drilling into plug
- flat finishes on both cylinder sides prevent rotation

Technical data
- cylinder front face Ø, 24.8 mm
- M22 threads for WS27 fastening nut
- basic material: brass
- steel cam, blue galvanised

Included in delivery
- locking cylinder with 5072 standard cam, 33.5 mm
- M22 fastening nut

Assembly & operation
- for material thickness up to 17 mm
- cylinder aperture Ø 23 flattened to 17.7 mm
- cam secured by 2 rear-side screws

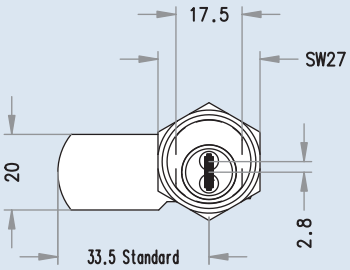

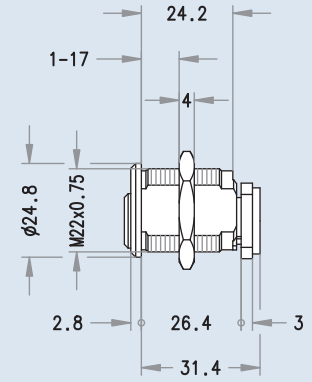

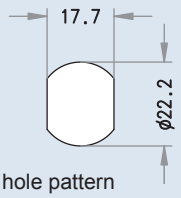

www.Bravite.com

MB23SZ switch cylinder

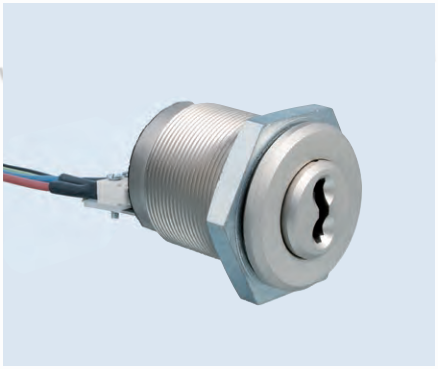

Ordering information
MB23SZ [finish]

Applications and usage
- as switch cylinder with integrated switch element
- for direct activation of circuits

Included in delivery
- locking cylinder with switch elements and connection cabling
- WS27 fastening nut

Functional characteristics
- 90 degree locking movement
- on/off switch function
- key removal only possible in one position

Technical data
- cylinder front face Ø, 24.8 mm
- M23 threads for WS27 fastening nut
- basic material: brass
- F4 T7 switch element
- with earth connection

Assembly & operation
- for material thickness up to 14 mm
- cylinder aperture Ø 23 flattened on one side to 17.7 mm
- electrical connection must be performed by a professional

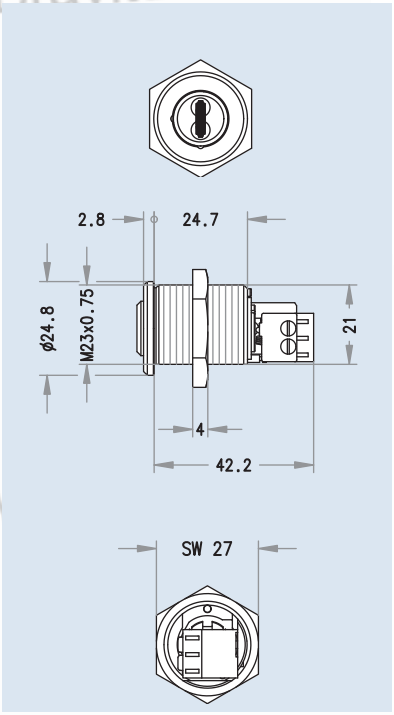

www.Bravite.com

MB23GT cam lock for glass door



Ordering information
MB23 [finish], [cam], [fastening plate], if the standard cam is desired, no further information is necessary

Applications and usage
- glass showcase locks
- glass door cabinets

Functional characteristics
- locking by cam
- 90 degree locking movement
- key can only be removed in closed condition
- flat side finishes prevent rotation
- rear-side fixation of the cylinder with a hex nut (WS27)
- standard cam, 33.5 mm
- bevelled-edge fastening plate

Security features
- hard metal elements to prevent drilling into plug
- flat finishes on both cylinder sides prevent rotation

Technical data
- cylinder front face Ø, 24.8 mm
- M22 threads for WS27 fastening nut
- basic material: brass
- steel cam, blue galvanised
- brushed aluminium fastening plate

Included in delivery
- locking cylinder with 5072 standard cam, 33.5 mm
- M22 fastening nut
- fastening plate
- plastic plate

Assembly & operation
- for material thickness up to 17 mm
- cylinder aperture Ø 23 flattened to 17.7 mm
- cam secured by 2 rear-side screws
- plastic plate to protect glass

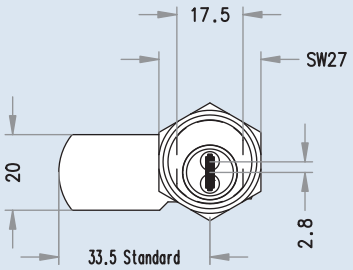

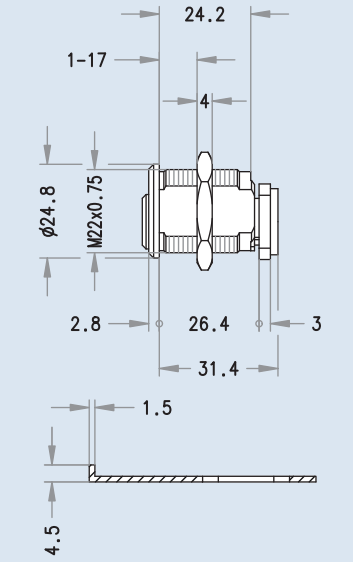

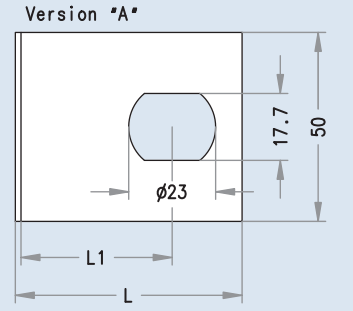

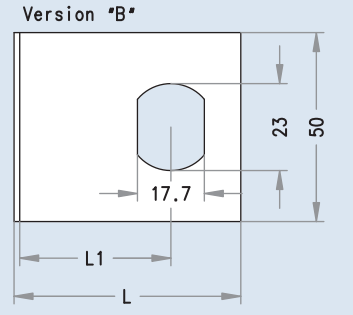

www.Bravite.com

MB23 MB cam lock

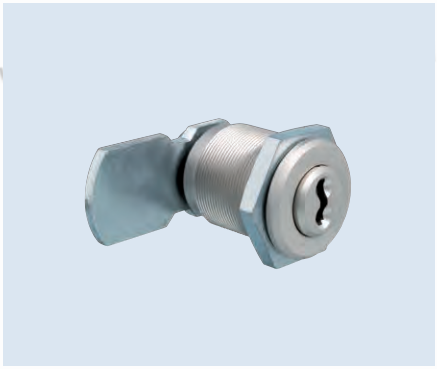

Ordering information

MB23MB [finish], [cam], if the standard cam is desired, no further information is necessary

Applications and usage

- wooden and sheet metal boxes
- mailboxes with medium cylinder aperture
- showcase locks
- emergency key boxes
- key boxes
- wardrobe boxes/lockers
- cabinets
- rose for metal thicknesses < 0.5 mm

Functional characteristics

- locking by cam
- 90 degree locking movement
- key can only be removed in closed condition
- flat side finish to prevent rotation
- rear-side fixation of the cylinder with a hex nut (WS27)
- standard cam, 33.5 mm

Technical data

- cylinder front face Ø, 24.8 mm
- M22 threads for WS27 fastening nut
- basic material: brass
- steel cam, blue galvanised

Included in delivery

- locking cylinder with 5072 standard cam, 33.5 mm
- M22 fastening nut

Assembly & operation

- for material thickness up to 17 mm
- cylinder aperture Ø 23 flattened on one side to 21 mm
- cam secured by 2 rear-side screws

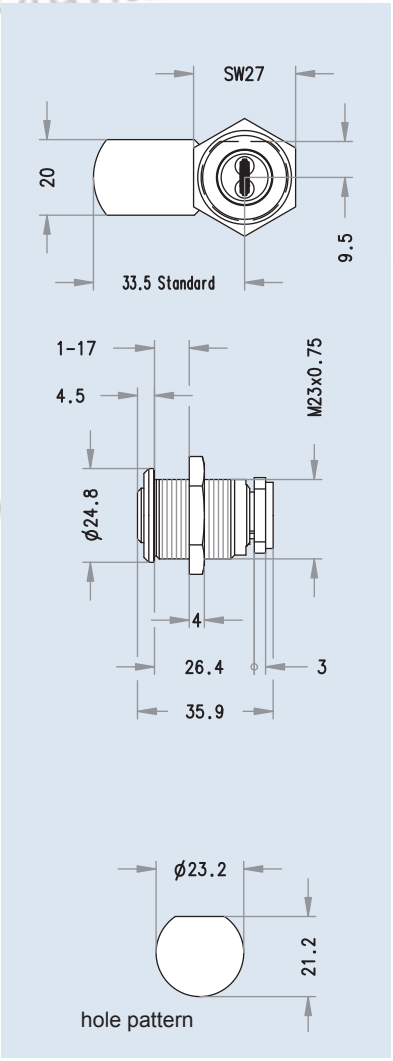

www.Bravite.com

www.Bravite.com
www.Bravite.com
www.Bravite.com
www.Bravite.com
www.Bravite.com
www.Bravite.com
www.Bravite.com

MB30 cam lock



Ordering information
MB30 [finish], [cam], if the standard cam is desired, no further information is necessary

Applications and usage

- wooden and sheet metal boxes
- showcase locks
- emergency key boxes with compulsory locking
- key depositories
- key boxes
- wardrobe boxes/lockers
- cabinets
- fuse and junction boxes

Functional characteristics

- locking by cam
- 90 degree locking movement
- key can only be removed in closed condition
- flat side finishes prevent rotation
- rear-side fixation of the cylinder with a hex nut (WS36), 33.5 mm standard cam
- S function (MB30S), key can be removed in either of 2 positions

Technical data

- cylinder front face Ø, 30 mm
- M30 threads for WS36 fastening nut
- basic material: brass
- steel cam, blue galvanised

Included in delivery

- locking cylinder with 5072 cam, 33.5 mm
- M30 fastening nut

Assembly & operation

- for material thicknesses from 1 to 20 mm
- cylinder aperture Ø 30 flattened to 22 mm
- cam secured by 2 rear-side screws

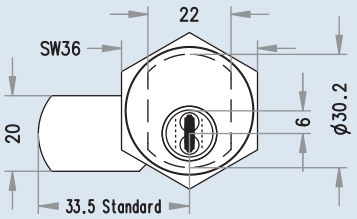

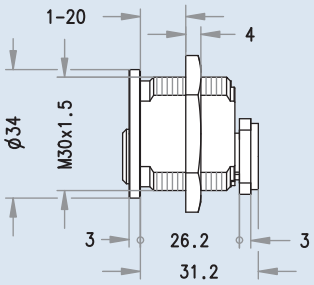

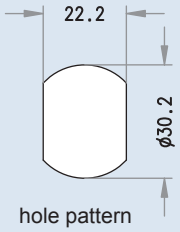

www.Bravite.com

MB30SZ switch cylinder

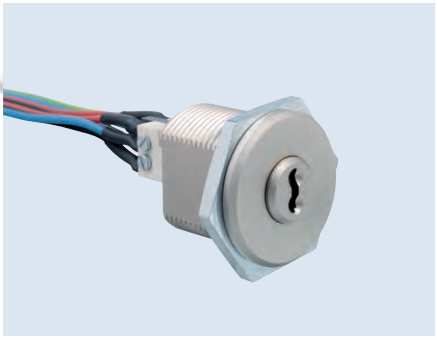

Ordering information
MB30SZ [finish]

Applications and usage
- as switch cylinder with integrated switch element
- for direct activation of circuits

Included in delivery
- locking cylinder with switch elements and connection cabling
- WS36 fastening nut

Functional characteristics
- 90° locking movement
- on/off switch function
- key removal only possible in one position

Technical data
- cylinder front face Ø, 34 mm
- M30 threads for WS36 fastening nut
- basic material: brass
- F4 T7 switch element
- with earth connection

Assembly & operation
- for material thickness up to 20 mm
- cylinder aperture Ø 30 flattened on one side to 22 mm
- electrical connection must be performed by a professional

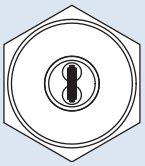

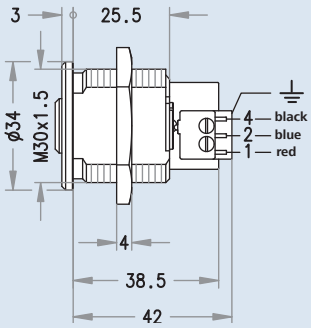

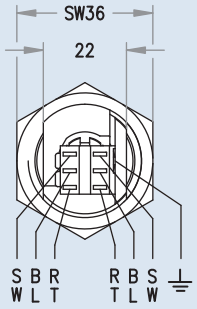

www.Bravite.com

MB30 MB cam lock



Ordering information

MB30MB [finish], [cam], if the standard cam is desired, no further information is necessary

Applications and usage

- wooden and sheet metal boxes
- showcase locks
- emergency key boxes with compulsory locking
- key depositories
- key boxes
- wardrobe boxes/lockers
- cabinets
- fuse and junction boxes

Functional characteristics

- locking by cam
- 90 degree locking movement
- key can only be removed in closed condition
- flat side finishes prevent rotation
- rear-side fixation of the cylinder with a hex nut (WS36)
- standard cam, 33.5 mm

Included in delivery

- locking cylinder with 5072 standard cam, 33.5 mm
- M30 fastening nut

Assembly & operation

- for material thicknesses from 1 to 20 mm
- cylinder aperture Ø 30 flattened to 22 mm
- cam secured by 2 rear-side screws

Technical data

- cylinder front face Ø, 30 mm
- M30 threads for WS36 fastening nut
- basic material: brass
- steel cam, blue galvanised

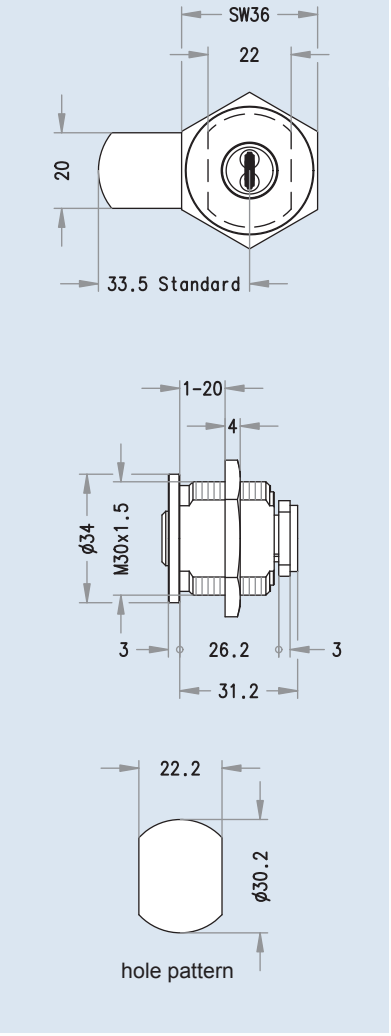

www.Bravite.com

MRH22 cam lock



Ordering information
MRH22 [S] [cylinder length], [finish], [mounting plate: rectangular (E), round (R)]

Applications and usage
- wooden furniture doors and drawers

Functional characteristics
- locking by cam
- 100 degree cam movement
- key is removable in closed condition
- cylinder fixation by way of rear-side mounting plate
- standard cam, 31.5 mm

Technical data
- cylinder front face Ø, 22 mm without rose
- basic material: brass
- brass cam and steel mounting plate, blue galvanised

Included in delivery
- cam lock with 31.5 mm standard cam, mounting plate, without rose

Assembly & operation
- for material thicknesses 25 mm to 65 mm
- rear-side fixation by way of rectangular mounting plate (standard) or
- on request, with a round mounting plate
- cylinder can be used right/left
- design S: key can be removed in 2 positions

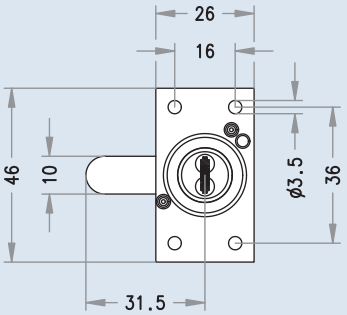

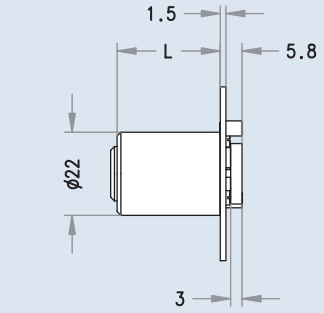

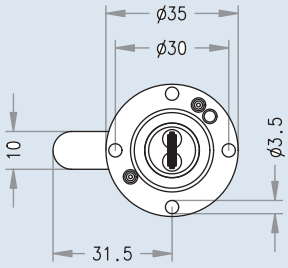

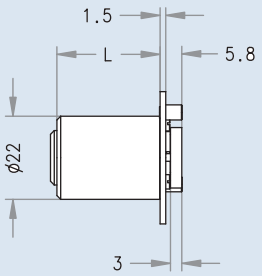

Size	L
0	27.3
1	32.3
2	37.3
3	42.3
4	47.3
5	57.3
6	67.3

www.Bravite.com

SRZ22 cam lock

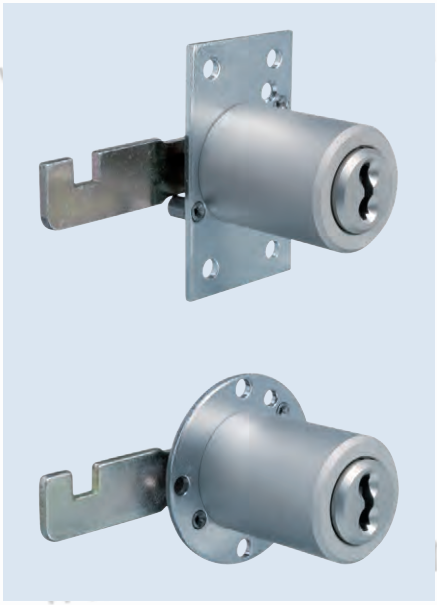

Ordering information
SRZ22 [cylinder length], [finish], [mounting plate: rectangular (E), round (R)]

Applications and usage
- for sliding doors in wooden or metal furniture

Functional characteristics
- locking by cam (pivot bolt)
- 90 degree cam movement
- 360 degree locking movement
- key is removable in open and closed condition
- cylinder fixation by way of rear-side mounting plate
- standard cam, 40 mm

Included in delivery
- cam lock with 40 mm standard cam, mounting plate, without rose

Assembly & operation
- for material thicknesses 25 mm to 65 mm
- rear-side fixation by way of rectangular mounting plate (standard) or
- on request, with a round mounting plate
- cylinder can be used right/left

Technical data
- cylinder front face Ø, 22 mm without rose
- basic material: brass
- steel cam and mounting plate, blue galvanised

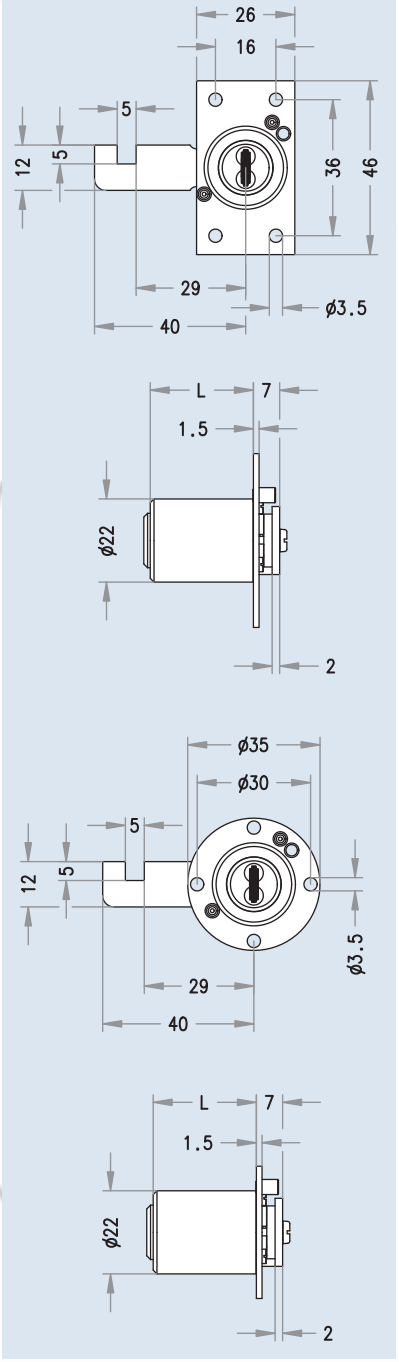

www.Bravite.com

ZB27 cam lock



Ordering information
ZB27 [finish], [cam], if the standard cam is desired, no further information is necessary

Applications and usage
- wooden and sheet metal boxes
- mailboxes with large cylinder aperture
- mailbox systems with large cylinder aperture
- electric junction boxes
- fuse boxes

Functional characteristics
- locking by cam
- 90 degree locking movement
- key can only be removed in closed condition
- cylinder fixation by way of rear-side clamp plate
- 5072 standard cam, 33.5 mm

Technical data
- cylinder front face Ø, 34 mm without rose, 50 mm with rose
- basic material: brass
- steel cam, blue galvanised

Included in delivery
- locking cylinder with 5072 standard cam, 33.5 mm, without rose

Assembly & operation
- for material thicknesses from 1 to 8.5 mm (without rose)
- cam secured by 2 rear-side screws

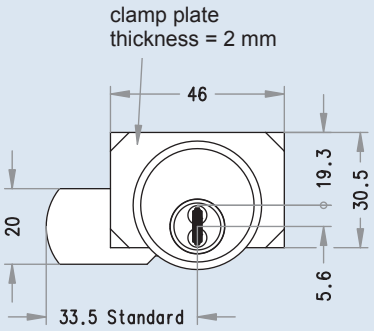

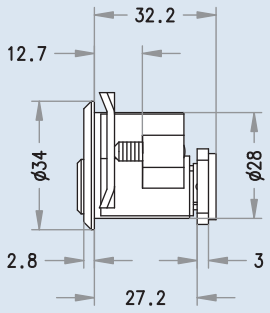

www.Bravite.com

ZB27K cam lock



Ordering information

ZB27K [finish], [cam], if the standard cam is desired, no further information is necessary

Applications and usage

- wooden and sheet metal boxes
- electric junction boxes in outdoor areas
- fuse boxes in outdoor areas

Functional characteristics

- locking by cam
- 90 degree locking movement
- key can only be removed in closed condition
- cylinder fixation by way of rear-side clamp plate
- 5072 standard cam, 33.5 mm
- with dust cover

Technical data

- cylinder front face Ø, 34 mm without rose, 50 mm with rose
- basic material: brass
- steel cam, blue galvanised

Included in delivery

- cam lock with 33,5mm standard cam, dust cover, without rose

Assembly & operation

- for material thicknesses from 1 to 8.5 mm (without rose)
- cam secured by 2 rear-side screws

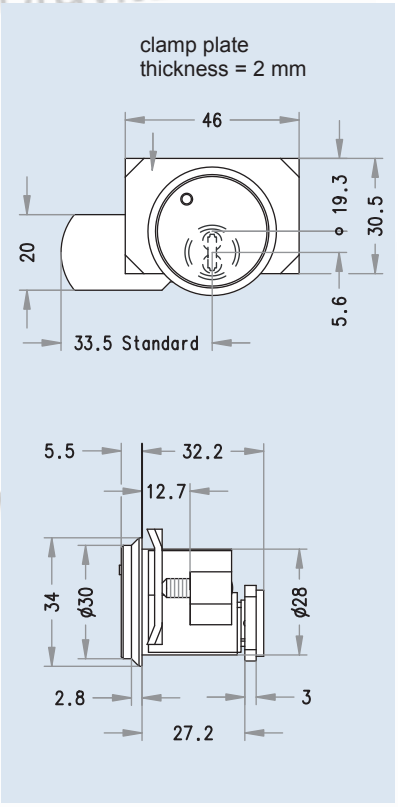

www.Bravite.com

HMB Euro profile cam lock



Ordering information
HMB, right/left specification necessary [finish], [cam], if the standard cam is desired, no further information is necessary

Applications and usage
- wooden cabinets
- showcase locks

Functional characteristics
- locking by cam
- 90 degree locking movement
- key can only be removed in closed condition
- cylinder fixation by way of rear-side fastening plate with end-stop
- 5072 standard cam, 37.5 mm, heavy duty strength

Security features
- hard metal elements to prevent drilling into plug

Technical data
- basic material: brass
- heavy duty cam
- steel cam and fastening plate, blue galvanised

Included in delivery
- 5072 standard cam, 37.5 mm, heavy duty strength
- with fastening plate

Assembly & operation
- for material thickness up to 28 mm
- Euro profile cylinder aperture
- cam secured by 2 rear-side screws
- 4-fold screw fixation of the cylinder

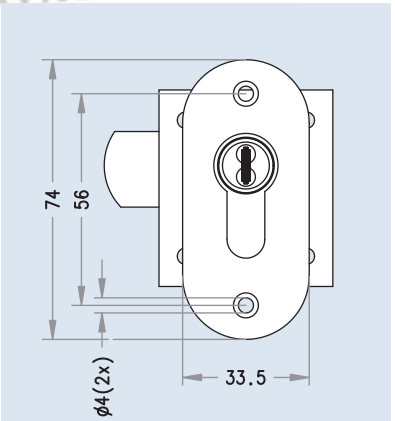

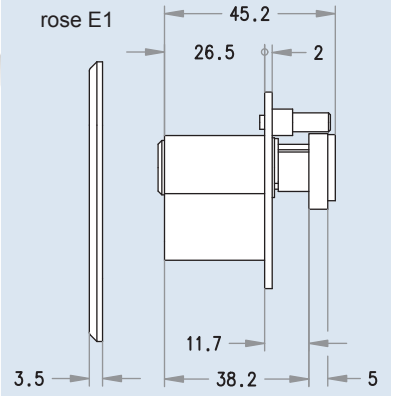

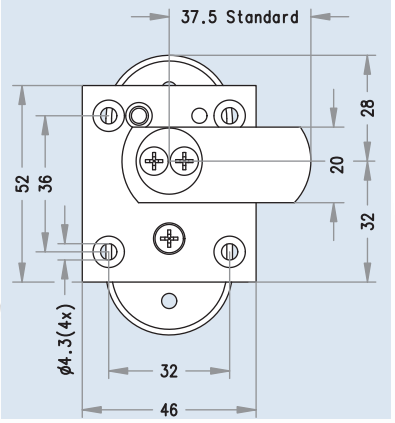

www.Bravite.com

Product catalogue, Release 01/10/2009
Errors and misprints excepted. Subject to technical change without notice.

MR22 furniture cylinder

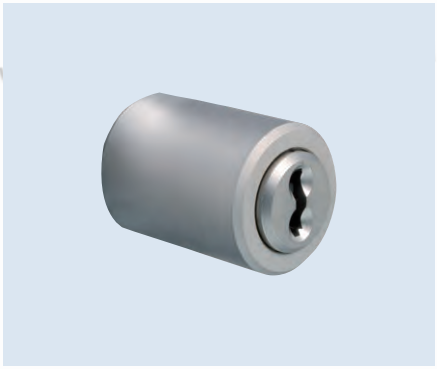

Ordering information

- MR22 [cylinder length], [finish]

Applications and usage

- as furniture lock
- for cylinder turns
- as switch cylinder
- with one or more key removal positions (MR 22 S = 2 removal positions)

Functional characteristics

- 360 degree locking movement

Included in delivery

- furniture round cylinder

Assembly & operation

- cylinder can be used right/left
- cylinder front face Ø, 22 mm without rose
- basic material: brass

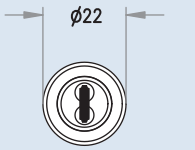

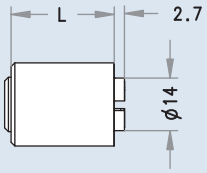

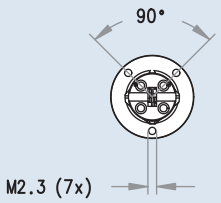

Size	L
0	27,3
1	32,3
2	37,3
3	42,3
4	47,3
5	57,3
6	67,3

www.Bravite.com

MR24 ASS furniture cylinder



Ordering information
MR24 ASS [finish]

Applications and usage
- screw-on cylinder prepared for Junie ASS system locks

Functional characteristics
- furniture screw-on cylinder for ASS system locks

Technical data
- cylinder front face Ø 24 mm without rose
- basic material: brass
- with adapter for ASS system locks

Included in delivery
- MR24 furniture round cylinder without rose, with adapter and cam for ASS

Assembly & operation
- simple installation by virtue of rear-side fastening to ASS lock cases

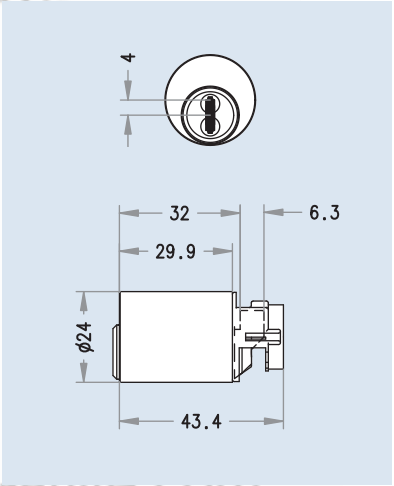

www.Bravite.com

MRT25 / MRL25 furniture cylinders



Ordering information
MRT25/31, [finish], [lock case type]
MRT25/36, [finish], [lock case type]
MRL25/31, [finish]
MRL25/36, [finish]

Applications and usage

- with Universal 4000 screw-on bolt lock for single locking
- for cupboard doors
- for cabinet doors
- with Universal 4540 rotary bar bolt lock for multiple locking
- for cupboard doors with large clearance
- for cabinet doors with large clearance

Functional characteristics

- 360 degree locking movement
- rear-side fastening screws for attachment to Universal 4000 screw-on bolt lock (configured for door design)
- ZVS Universal 4000 screw-on central lock
- Universal 4540 rotary bar bolt lock

Technical data

- cylinder front face Ø, 25 mm without rose
- standard 31 mm cylinder length
- basic material: brass

Included in delivery

- MRT25 furniture round cylinder with rose, configured for Universal 4000 lock cases (door design), Universal 4540

Assembly & operation

- universal clamp fixation to lock cases
- easily retrofitted to lock cases

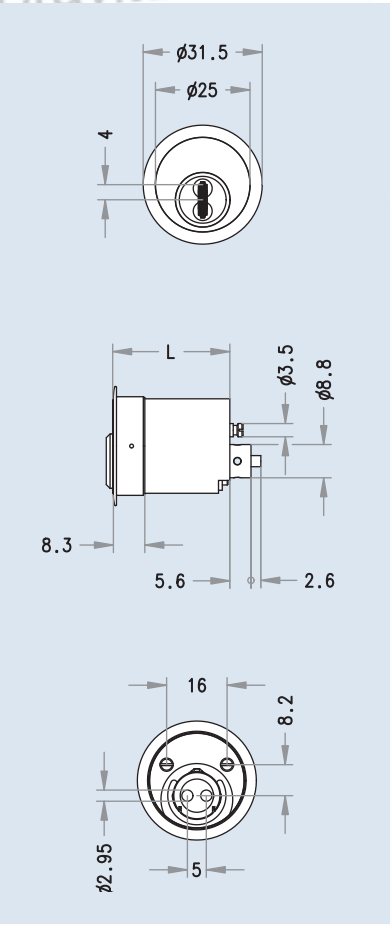

www.Bravite.com

ZVZ22 central lock cylinder

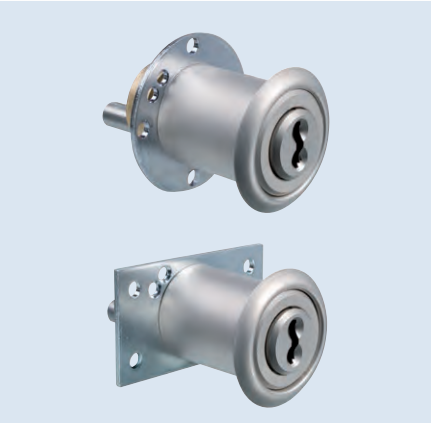

Ordering information
ZVZ22 [cylinder length], [finish]

Applications and usage
- to lock drawers (12 mm stroke)

Functional characteristics
- 180 degree bolt movement
- 360 degree locking movement
- key is removable in open and closed condition
- cylinder fixation by way of rear-side mounting plate

Technical data
- cylinder front face Ø 22 mm without rose
- basic material: brass

Included in delivery
- central lock cylinder with rose

Assembly & operation
- for material thicknesses 25 mm to 65 mm
- rear-side fixation by way of rectangular mounting plate (standard) or
- on request, with a round mounting plate
- cylinder can be used right/left

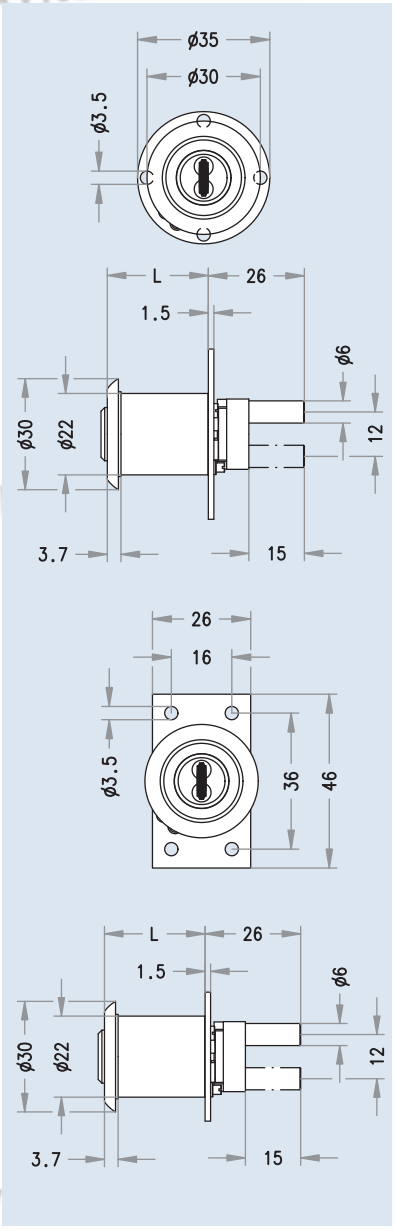

www.Bravite.com

Product catalogue, Release 01/10/2009
Errors and misprints excepted. Subject to technical change without notice.

DRZ22 push-in cylinder

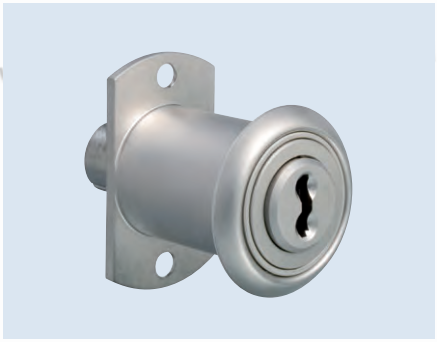

Ordering information
DRZ22, [finish]

- **Applications and usage**
  - to lock sliding doors
- **Functional characteristics**
  - 12 mm bolt stroke
  - locking without key
  - lock release with key
  - cylinder fixation by way of integrated mounting plate
- **Technical data**
  - cylinder front face Ø, 22 mm without rose
  - cylinder length, 28.5 mm
  - basic material: brass
- **Included in delivery**
  - push-in cylinder with rose
- **Assembly & operation**
  - rear-side fixation, integrated mounting plate

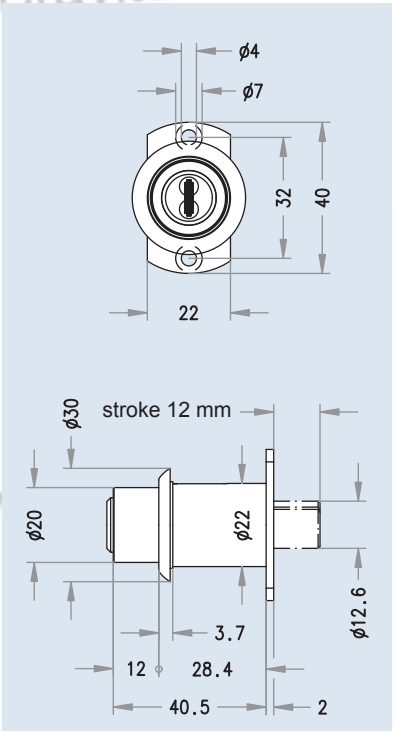

www.Bravite.com

DPM80 coin-operated lock



Ordering information
coin-operated lock [left/right] for [coins € 1/ € 2/tokens]

Functional characteristics

- the key can be removed after a coin is inserted and the container is locked
- the coin is returned automatically when the container is unlocked with the key
- the coin can be taken from the inside

Security features

- side coin slot protects against attack in closed condition
- coin deflection inside the lock for verification

Technical data

- material: weatherproof plastic
- bolt of galvanised iron
- coin return recess integrated into lock

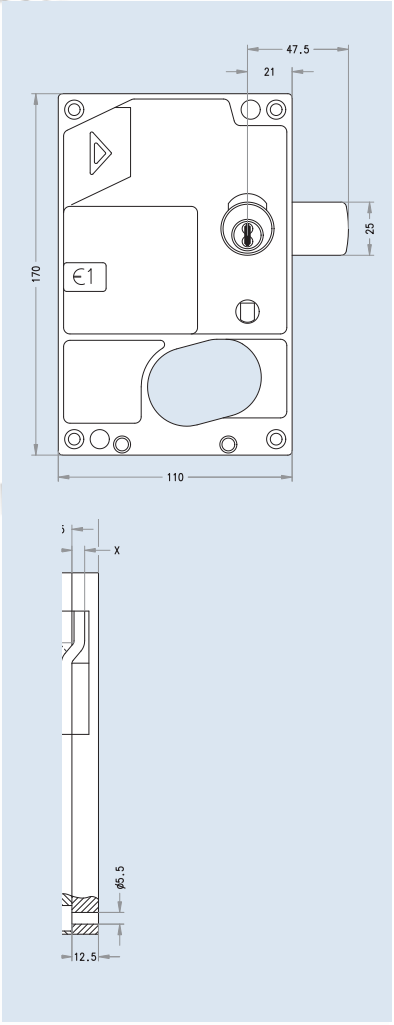

www.Bravite.com

Universal 4000 furniture screw-on lock



Ordering information
Universal 4000

Applications and usage
furniture screw-on lock for
- furniture doors
- cabinet doors
- shutters

Functional characteristics
- preset backset dimension for 25, 30 and 35 mm doors
- preset backset dimension for 20, 25 and 30 mm shutters
- usable on the left/right of doors and shutters

Included in delivery
- Universal 4000 lock case, without fastening material, without locking plate

Assembly & operation
- universal clamp fixation with side screws on the lock case
- easily retrofitted to lock cases, even when lock cases are already installed

Security features
- solid lock case design
- 2-rotation bolt throw (5 mm and 10 mm)

Technical data
- small installed dimensions, 52 x 54 mm
- 3-fold screw fixation to door or shutter
- adjustable backset dimension
- lock case and bolt made of nickel-plated iron

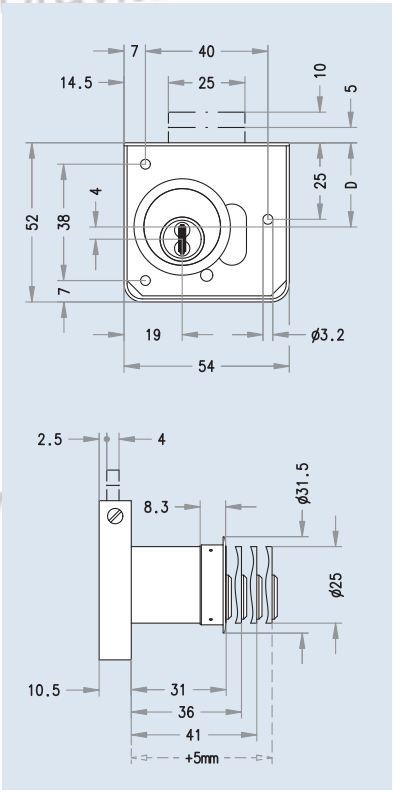

www.Bravite.com

Universal 4540 espagnolette lock for furniture



Ordering information
Universal 4540 with MRT/MRL 25

Applications and usage

espagnolette bolt lock for furniture like
- tall furniture doors and
- tall cabinet doors

which, due to their structure, require more than just locking

Functional characteristics

- 40 mm backset dimension
- configured for 8 mm, full-length espagnolette
- single rotation

Security features

- solid lock case design
- single rotation 12 mm bolt throw

Technical data

- small installed dimensions, 61 x 65 mm
- 4-fold screw fixation
- lock case and bolt made of nickel-plated iron
- configured for 8 mm rotary bars
- flattened to 7 mm

Included in delivery

- Universal 4540 lock case
- Accessories:
- 2 hook bolts
- 1 angle strike plate
- 2 joints bolts
- rod guide

Assembly & operation

- universal clamp fixation with a side screw to the lock case
- easily retrofitted to lock cases, even when lock cases are already installed

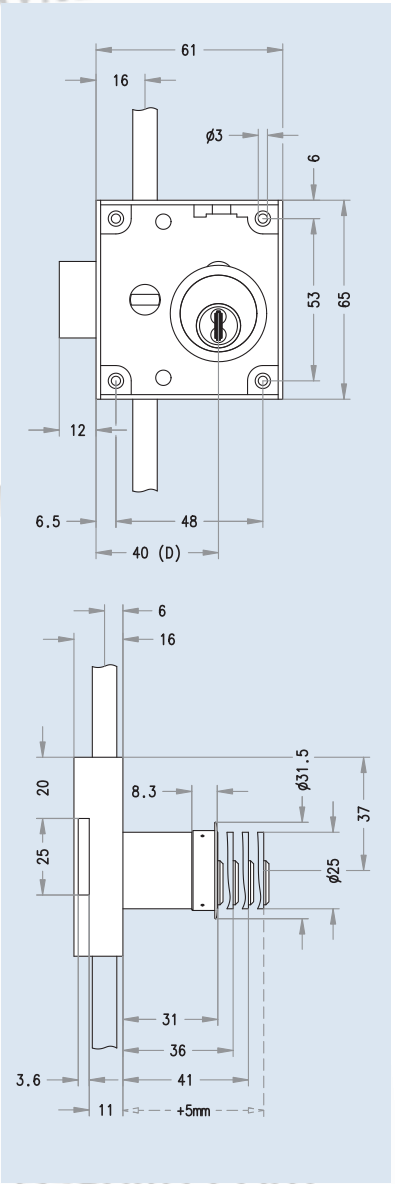

www.Bravite.com

Universal 4525 espagnolette lock for furniture



Ordering information
Universal 4525 (left/right specification necessary)

Applications and usage

espagnolette lock for furniture like

- lightweight furniture doors and
- lightweight cabinet doors which, due to their structure, require more than just locking and which have already been predrilled for a 25 mm backset dimension. Otherwise we recommend the Universal 4540 espagnolette lock!

Functional characteristics

- 25 mm backset dimension
- configured for 7 mm, full-length espagnolette
- single rotation locking function

Security features

- lightweight lock case design
- single rotation 9 mm bolt throw

Technical data

- small installed dimensions, 46 x 83 mm
- 4-fold screw fixation
- lock case and bolt made of nickel-plated iron
- configured for 7 mm full-length rotary bar flattened to 6 mm

Included in delivery

- Universal 4525 lock case
- Accessories:
- 2 hook bolts
- 1 angle strike plate
- 2 joint bolts
- bar guide

Assembly & operation

- universal clamp fixation with a side screw to the lock case

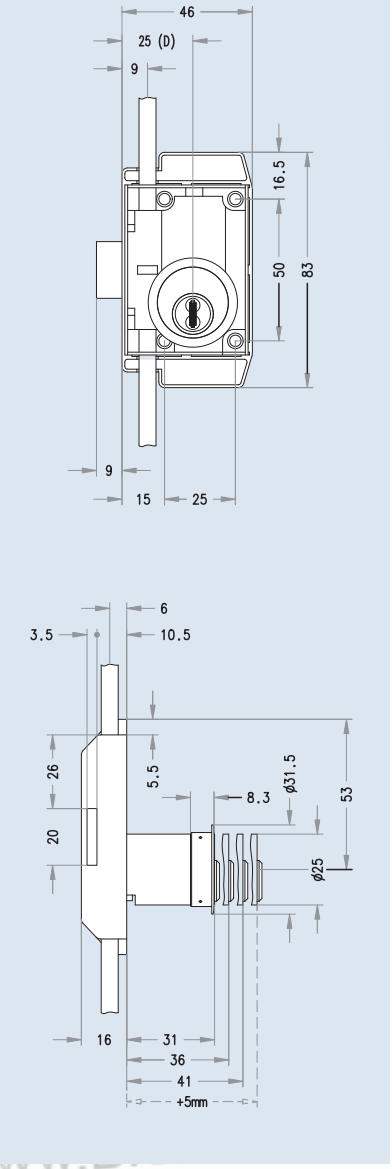

This is a discontinued product available only as long as stocks last!

www.Bravite.com

MAR cabinet lock



Ordering information
MAR

Applications and usage
cabinet lock for simple locking of
- shutters
- cupboard doors
- cabinets

Functional characteristics
- single rotation
- Designs: right/left and for shutters
- 10 mm bolt throw

Security features
- solid lock case design
- single rotation 10 mm bolt throw

Technical data
- lock case of bronzed iron

Included in delivery
- lock case without accessories, without fastening material

Assembly & operation
- simple installation with 4-fold screw fastening

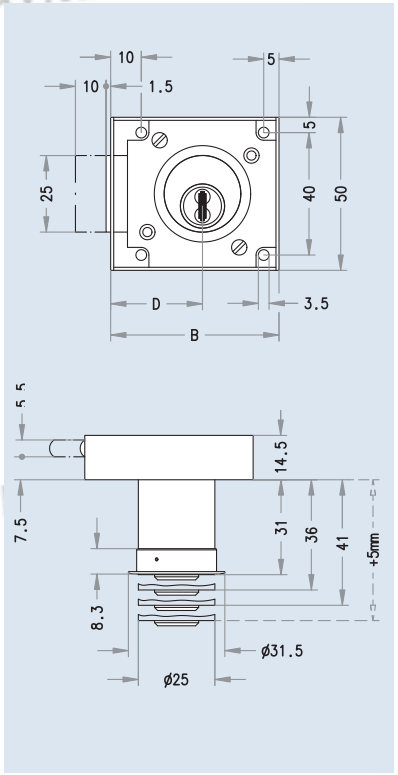

www.Bravite.com

Product catalogue, Release 01/10/2009
Errors and misprints excepted. Subject to technical change without notice.

MER cabinet lock



Ordering information

- MER left/right and for shutter [backset dimension]

- **Applications and usage**
  - cabinet lock for simple locking of
  - shutters
  - cupboard doors
  - cabinets
- **Functional characteristics**
  - for flush-mount in cabinet door/shutter
  - single rotation
  - Designs: right/left and for shutters
  - 11 mm bolt throw
- **Security features**
  - solid lock case design
  - single rotation 11 mm bolt throw
- **Technical data**
  - lock case of bronzed iron
- **Included in delivery**
  - lock case without accessories, without fastening material
- **Assembly & operation**
  - for installation into pre-milled mortise

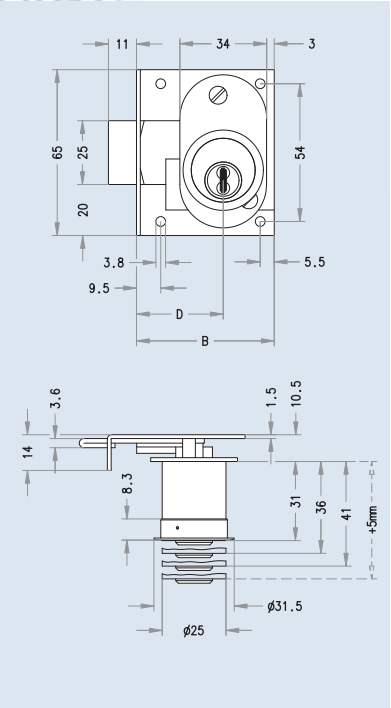

www.Bravite.com

SES sliding door lock for cabinet



Ordering information

- SES

Applications and usage

- for simple locking of sliding doors

Included in delivery

- lock case without strike plate, without accessories, without fixing material

Functional characteristics

- for flush-mount in sliding doors

Security features

- lightweight lock case design
- sturdy hook latch

Technical data

- lock case of galvanized iron

Assembly & operation

- for installation into pre-milled mortise
- for wood thicknesses up to 32 mm

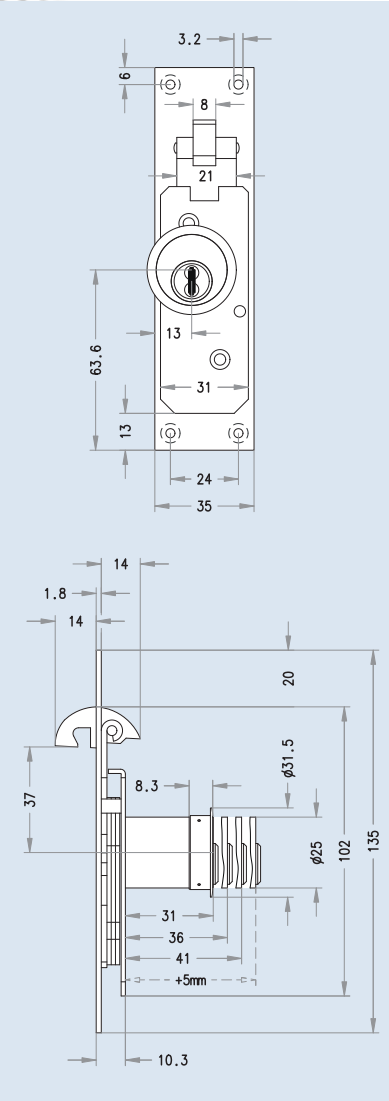

www.Bravite.com

645 furniture lock with MR 22



Ordering information
645 furniture lock with MR 22

- **Functional characteristics**
  - lockable round furniture turn with grip recess
  - rear-side square plug to operate an espagnolette lock
- **Technical data**
  - turn made of galvanised cast iron
  - outer diameter, Ø 45 mm
  - configured for MR22 furniture round cylinder
  - with 7 mm square plug

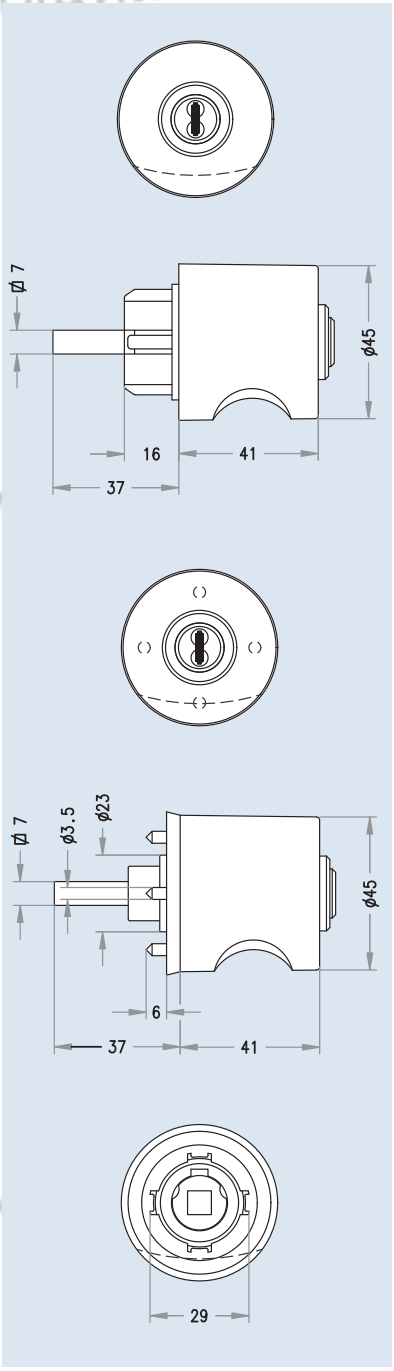

www.Bravite.com

AZ rim cylinder



Ordering information
AZ [finish]

Applications and usage
- prepared for EVVA series K900 and K9000 security rim locks

Functional characteristics
- 360 degree locking movement
- tail bar can be shortened at 5 mm spaced nicks

Security features
- hard metal drill protection in plug and housing
- steel balls serve as drilling protection for the cylinder fastening screws
- vertical key insertion for optimal scan of locking elements.

Technical data
- cylinder housing: basic material, brass
- cylinder plug: basic material, brass
- all scanning elements coated with Triflon
- tail bar for door thickness up to 50 mm
- cylinder Ø 34 mm
- rose Ø 50 mm

Included in delivery
- round cylinder with rose and
- 2 fixing screws, M5 x 40

Assembly & operation
- easy cylinder installation in prepared round hole
- cylinder fixation via 2 M5 fastener bore holes
- cylinder screws with pointed tips for simple installation

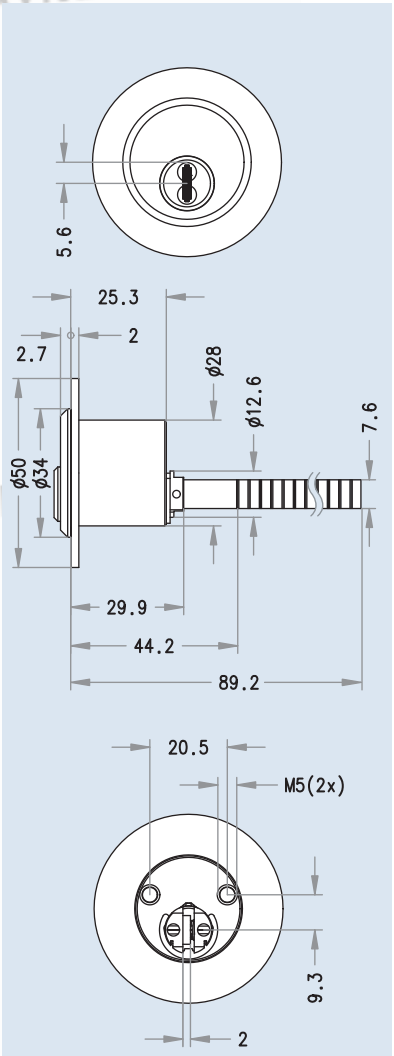

www.Bravite.com

Product catalogue, Release 01/10/2009
Errors and misprints excepted. Subject to technical change without notice.

AZG rim cylinder

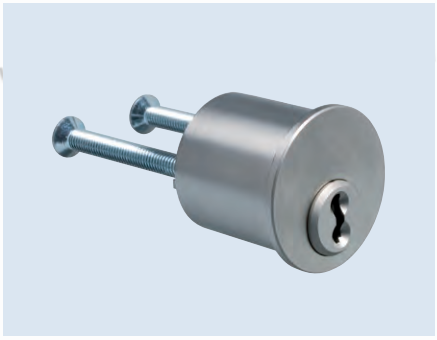

Ordering information
AZG [finish]

- **Applications and usage**
  for third-party products like rim locks
- **Included in delivery**
  - round cylinder with 2 fixing screws, M5 x 40
- **Functional characteristics**
  - 360 degree locking movement
  - tail bar can be shortened at 5 mm spaced nicks
- **Security features**
  - hard metal drill protection in plug and housing
  - steel balls serve as drilling protection for the cylinder fastening screws
  - vertical key insertion for optimal scan of locking elements
- **Technical data**
  - cylinder housing: basic material, brass
  - cylinder plug: basic material, brass
  - all scanning elements coated with Triflon
  - tail bar for door thickness up to 50 mm
  - cylinder Ø 34 mm
  - rose Ø 50 mm
- **Assembly & operation**
  - easy cylinder installation in prepared round hole
  - cylinder fixation via 2 M5 fastener bore holes
  - cylinder screws with pointed tips for simple installation

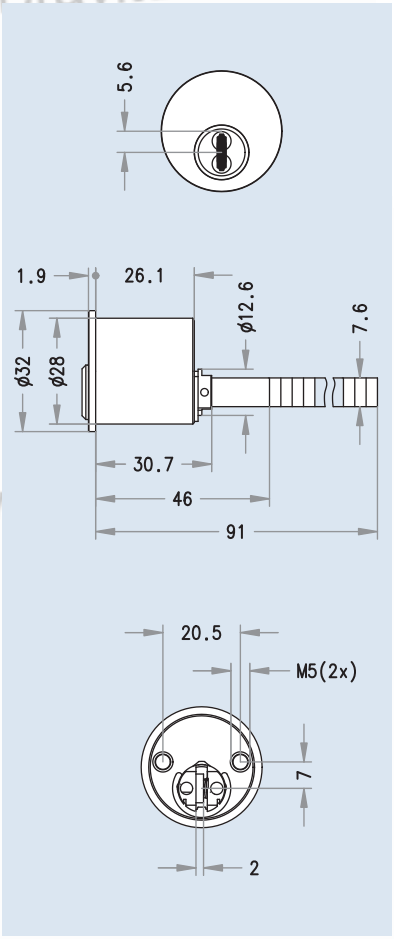

www.Bravite.com

AZI rim cylinder



Ordering information
AZ [finish]

Applications and usage
- for rim locks of various manufacturers

Included in delivery
- round cylinder with rose and
- 2 fixing screws, M5 x 40

Functional characteristics
- 360° locking movement
- tail bar can be shortened at 5 mm spaced nicks

Security features
- hard metal drill protection in plug and housing
- steel balls serve as drilling protection for the cylinder fastening screws
- vertical key insertion for optimal scan of locking elements

Technical data
- cylinder housing: basic material, brass
- cylinder plug: basic material, brass
- all scanning elements coated with Triflon
- tail bar for door thickness up to 50 mm
- cylinder Ø 34 mm
- rose Ø 50 mm

Assembly & operation
- easy cylinder installation in prepared round hole
- cylinder fixation via two M5 or M6 fastener bore holes
- cylinder screws with pointed tips for simple installation

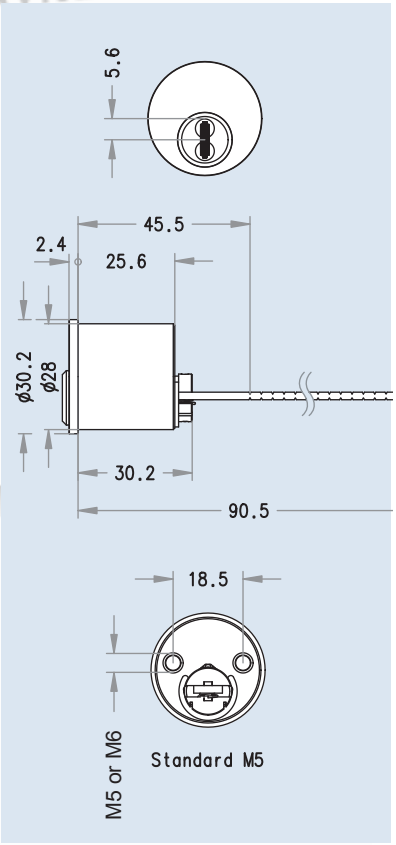

www.Bravite.com

AZ4050 rim cylinder



Ordering information
AZ [finish]

Applications and usage
- prepared for rim locks .131, .132, .133, .136

Included in delivery
- round cylinder with rose and 2 fixing screws, M5 x 40

Functional characteristics
- 360 degree locking movement
- tail bar can be shortened at 5 mm spaced nicks

Security features
- hard metal drill protection in plug and housing
- steel balls serve as drilling protection for the cylinder fastening screws
- vertical key insertion for optimal scan of locking elements

Technical data
- cylinder housing: basic material, brass
- cylinder plug: basic material, brass
- all scanning elements coated with Triflon
- tail bar for door thickness up to 50 mm
- cylinder Ø 34 mm
- rose Ø 50 mm

Assembly & operation
- easy cylinder installation in prepared round hole
- cylinder fixation via two M5 fastener bore holes
- cylinder screws with pointed tips for simple installation

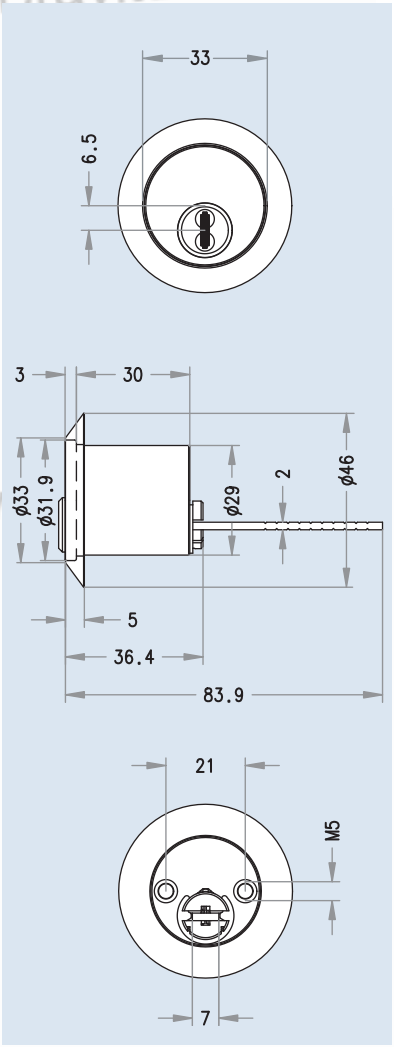

www.Bravite.com

AZ 4063 rim cylinder



Ordering information
AZ [finish]

Applications and usage
- prepared for rim locks .133, .136

Included in delivery
- round cylinder with rose and 2 fixing screws, M5 x 40

Functional characteristics
- 360 degree locking movement
- tail bar can be shortened at 5 mm spaced nicks

Security features
- hard metal drill protection in plug and housing
- steel balls serve as drilling protection for the cylinder fastening screws
- vertical key insertion for optimal scan of locking elements

Technical data
- cylinder housing: basic material, brass
- cylinder plug: basic material, brass
- all scanning elements coated with Triflon
- tail bar for door thickness up to 50 mm
- cylinder Ø 34 mm
- rose Ø 50 mm

Assembly & operation
- easy cylinder installation in prepared round hole
- cylinder fixation via 2 M5 fastener bore holes
- cylinder screws with pointed tips for simple installation

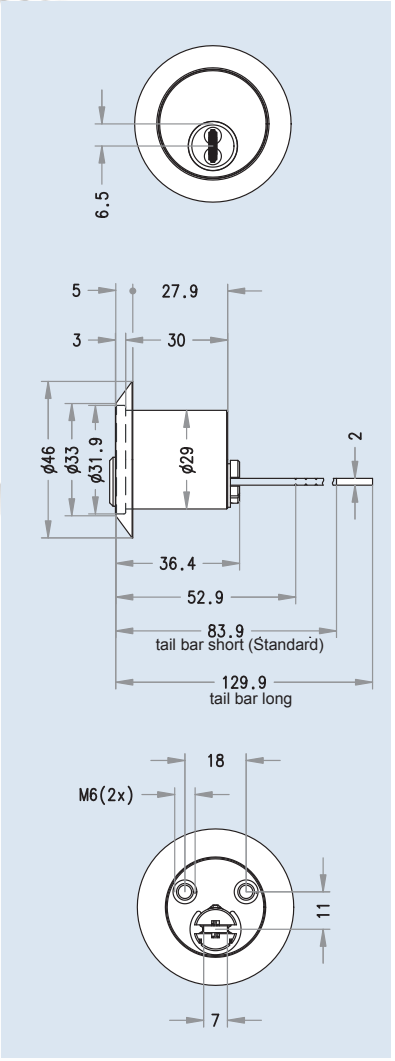

www.Bravite.com

PDZ portal double cylinder



Ordering information
PDZ cylinder length A/B, [finish], [security and usage options]

Applications and usage
- portals with direct bolting
- garden doors without mortise lock but direct bolting

Functional characteristics
- lockable from both sides with key
- Ø 15 mm locking bolt
- 21.5 mm bolt protrusion
- 15 mm stroke

Technical data
- cylinder housing: basic material, brass
- cylinder plug: basic material, brass
- all scanning elements coated with Triflon
- integrated locking bolt with
- 15 mm stroke

Included in delivery
- locking cylinder without fixing screw, with locking bolt

Assembly & operation
- cylinder installation in a prepared, empty cylinder aperture; configured for portal cylinder
- 3 possible M5 fastening variations

Security features
- hard metal drill protection in plug and housing
- vertical key insertion for optimal scan of locking elements

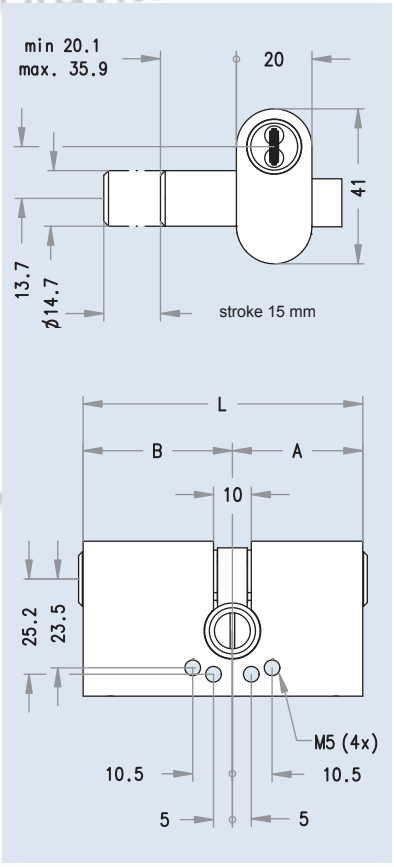

www.Bravite.com

PHZ Portal half cylinder



Ordering information
PHZ cylinder length A, [finish], [security and usage options]

Applications and usage
- portals with direct bolting
- garden doors without mortise lock but direct bolting
- show window shields

Functional characteristics
- operable with key from one side
- Ø 15 mm locking bolt
- 21.5 mm bolt protrusion
- 15 mm stroke

Security features
- hard metal drill protection in plug and housing
- vertical key insertion for optimal scan of locking elements

Included in delivery
- locking cylinder without fixing cap screw, with locking bolt

Technical data
- cylinder housing: basic material, brass
- cylinder plug: basic material, brass
- all scanning elements coated with Triflon
- integrated locking bolt with
- 15 mm stroke

Assembly & operation
- cylinder installation in a prepared, empty cylinder aperture for portal cylinder
- 3 possible M5 fastening variations

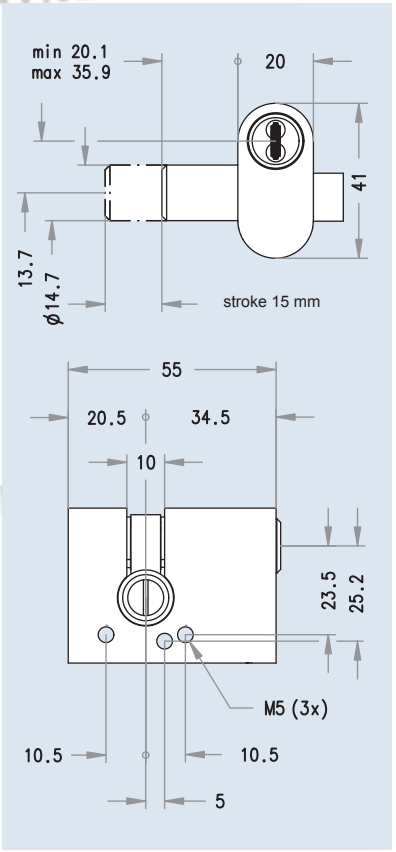

www.Bravite.com

Product catalogue, Release 01/10/2009
Errors and misprints excepted. Subject to technical change without notice.

EMZY MZT35i electronic motorised cylinder

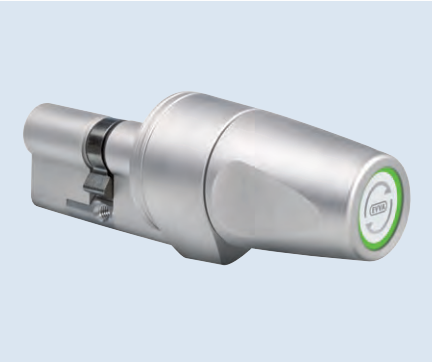

Ordering information

- KZ cylinder length A/B, MZT35i (A=outer side; B=inner side (thumbturn side)) [security and usage options], [finish]

Accessories

- "MCU MI"- micro controller for subfinish mounting, without power adapter
- "MCU NT"- power adapter for standard supply of the "MCU MI"-micro controller
- EVKA cylinder connection cable, 10 m
- ERK1 door contact incl. 1.5 m connection cable (white or brown)
- ERK4 door contact for metal doors with built-in tub, including 1.5 m connection cable
- EKAO open cable transition, length 30 cm incl. two end pieces (white, brown or chrome)
- ERKO bolt contact incl. 2 m connection cable with switch-over contact
- ABDMK 35 thumbturn cover

Applications and usage

- for mortise locks per DIN or ÖNORM
- for mortise locks per harmonised European norms
- small backset dimension for the motor-driven thumbturn on the thumbturn side, particularly well suited for metal frame doors
- and for mortise locks with profile cylinder apertures
- minimal 35 mm backset dimension for standard door installation per DIN 18101
- motor-driven thumbturn with integrated button for simple operation
- mechanical emergency release from the locking side
- electronic control via external input units (code keypad, wall reader, ...)

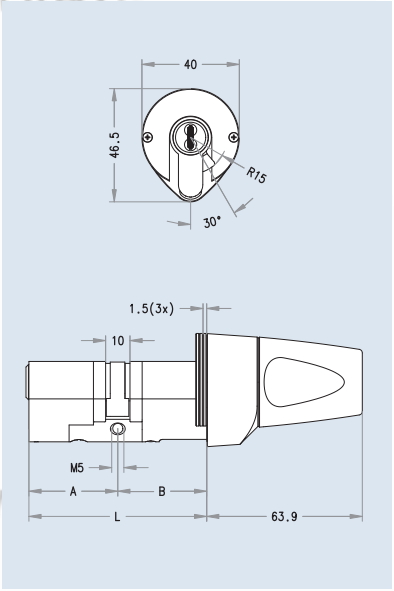

Included in delivery

- electronic motorised cylinder
- 3 spacer discs, 1.5 mm each
- fixing screw

Functional characteristics

- electronically operated, cabled motor-driven cylinder
- to lock/unlock locks
- simple night-and-day mode switch
- interactive learn-mode for lock function (1 and 2 rotation locks)

Security features

- shape-matched spacer discs allow a seamless transition from the thumbturn to the fitting

Technical data

- cylinder housing: basic material, brass
- cylinder plug: basic material, nickel-silver
- all scanning elements coated with Triflon
- cam base position, 30 degrees
- cam width, 9.3 mm
- modular cylinder structure
- motor thumbturn torque, about 1 Nm

Assembly & operation

- easy cylinder installation in a prepared, empty cylinder aperture
- cylinder overhang may not exceed 3 mm for security-relevant doors
- cylinder fixation via a M5 fastener bore hole

www.Bravite.com

Oval Double cylinder ODZ



Ordering information

- ODZ cylinder length A/B, [finish], [security and usage options]

Applications and usage

- for mortise locks for British oval cylinders
- for house doors, connecting doors, flat entry doors, security doors, metal frame doors, ...

Functional characteristics

- lockable from both sides with key
- 360 degree cam movement
- cam removal position, 30 degrees (from the short side)

Security features

- hard metal drill protection in plug and housing
- vertical key insertion and optimal scan of locking elements

Technical data

- cylinder housing: base material, brass
- cylinder plug: base material, nickel silver
- all scanning elements coated with Triflon
- cam base position, 30 degrees
- cam width, 9.3 mm
- compact design

Included in delivery

locking cylinder with fixing screw

Assembly & operation

- easy cylinder installation in a prepared, empty cylinder aperture
- cylinder overhang may not exceed 3 mm for security-relevant doors
- cylinder fixation via a M5 fastener bore hole

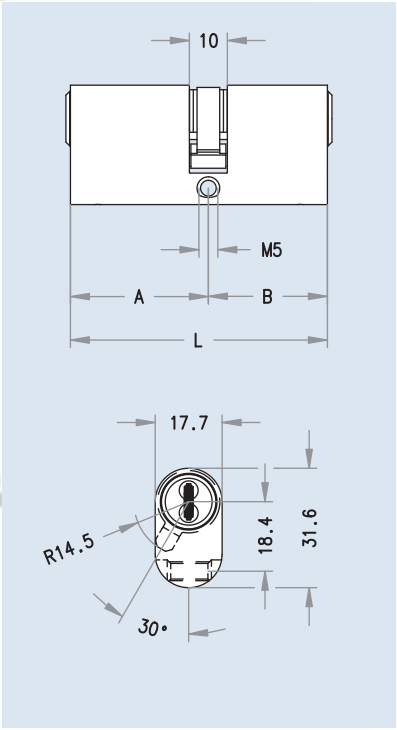

Cylinder lengths

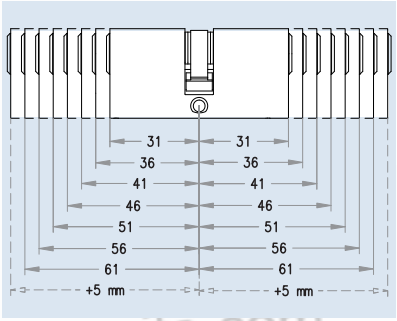

Finishes

Finishes	Abbreviations	Standard	Surcharge
Polished brass lacquered	MP	●	
Satin nickel	NI	●	
Polished nickel	NP		O
Satin chrome	CR		O
Polished chrome	CP		O
Patinated black	PS		O
Patinated brown	PB		O
Satin brass	MS		O
PVD coated	PVD-MS		O

www.Bravite.com

Product catalogue, Release 01/10/2009
Errors and misprints excepted. Subject to technical change without notice.

Oval thumbturn cylinder OKZ

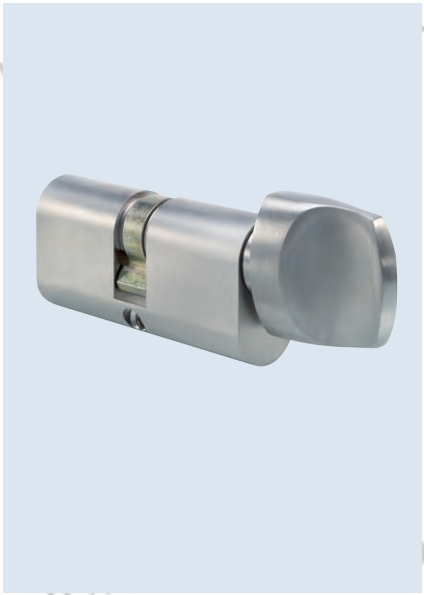

Ordering information

- KZ cylinder length A/B (A=outer side; B=inner side (thumbturn side)) [security and usage options]
- [finish]/[thumbturn design]
- when thumbturn design is not specified: standard AKN thumbturn

Applications and usage

- for mortise locks for British oval cylinders
- for front doors, connecting doors, flat entry doors, security doors, metal frame doors, ...

Functional characteristics

- lock is operable from the outside with a key and from the inside with the thumbturn
- 360 degree cam movement

Security features

- hard metal drilling protection for the outside plug and housing
- vertical key insertion for optimal scan of locking elements

Technical data

- cylinder housing: base material, brass
- cylinder plug: base material, nickel silver
- all scanning elements coated with Triflon
- cam base position, 30 degrees
- cam width 9.3 mm
- compact design
- Finishes: satin nickel-plated, satin brushed, polished lacquer

Included in delivery

- locking cylinder with thumbturn and fixing screw

Assembly & operation

- easy cylinder installation in a prepared, empty cylinder aperture
- cylinder overhang may not exceed 3 mm for security-relevant doors
- if necessary, inside thumbturn can be removed with a tool
- cylinder fixation via a M5 fastener bore hole

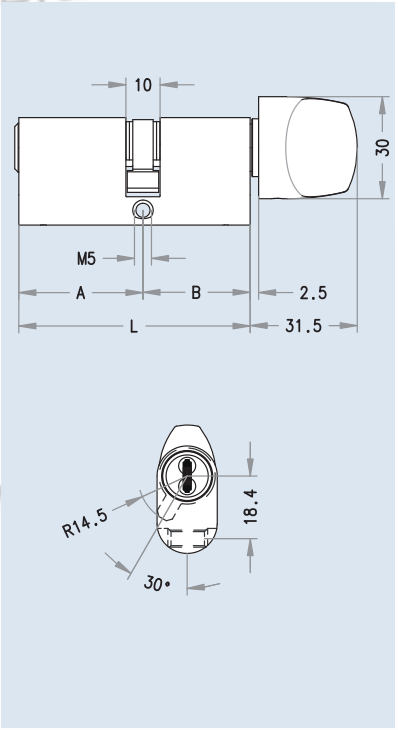

Cylinder lenghts

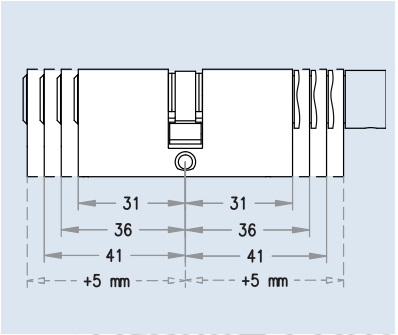

Finishes

Finishes	Abbreviations	Cylinder	AKN, KKN, FKN	RKN, MKN	OKN, OKNA	GKN
Polished brass lacquered	MP	●	●	●	●	●
Satin nickel	NI	●	●	●	●	●
Polished nickel	NP	O	O	O	O	O
Satin chrome	CR	O	O	O	O	O
Polished chrome	CP	O	O	O	O	O
Patinated black	PS	O	O	O	O	O
Patinated brown	PB	O	O	O	O	O
Satin brass	MS	O	O	O	O	O
PVD coated	PVD-MS	O	O	O		O
RAL colour	RAL					O

www.Bravite.com

Oval half cylinder OHZ



Ordering information

- UHZ cylinder length A, [finish], [security and usage options]

Applications and usage

- for one or more turn mortise locks and other diverse locks for British oval cylinders
- garage doors and roll-up doors fastened at the side

Functional characteristics

- operable with key from one side
- 360 degree cam movement
- 45 degree cam removal position
- 8 setting positions for cam (45°, 90°,135°, 180°, 225°, 270°, 315°, 360°)

Security features

- hard metal drill protection in plug and housing

Technical data

- cylinder housing: base material, brass
- cylinder plug: base material, nickel silver
- all scanning elements coated with Triflon
- cam base position 45 degrees (changeable)
- cam width 9.3 mm
- compact design

Included in delivery

- half cylinder with fixing screw

Assembly & operation

- easy cylinder installation in a prepared, empty cylinder aperture
- cylinder should be flush with the fitting or rose
- cylinder fixation via a M5 fastener bore hole

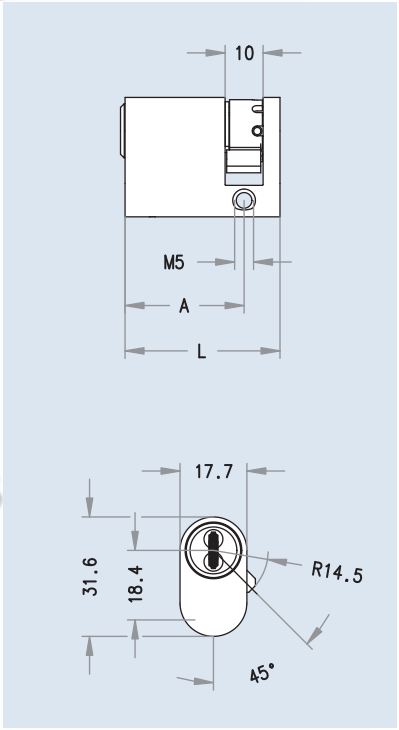

Cylinder lengths

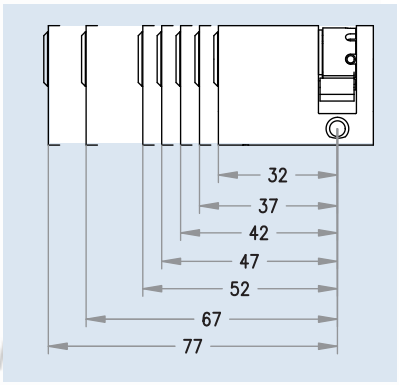

Finishes

Finishes	Abbreviations	Standard	Surcharge
Polished brass lacquered	MP	●	
Satin nickel	NI	●	
Polished nickel	NP		O
Satin chrome	CR		O
Polished chrome	CP		O
Patinated black	PS		O
Patinated brown	PB		O
Satin brass	MS		O
PVD coated	PVD-MS		O

www.Bravite.com

Product catalogue, Release 01/10/2009
Errors and misprints excepted. Subject to technical change without notice.

Rim cylinder type „M“ mortise



Ordering Information

- Mortise size [L], [Finish]

Applications and usage

- for mortise locks for rim cylinders 29,2 x 32 G/1“
- Standard Adams-Rite cam
- other cams on request

Functional characteristics

- locking movement 360 degrees

Security features

- hard metal drill protection in the plug
- vertical key insertion for optimal scan of locking elements

Technical data

- cylinder housing: base material, brass
- cylinder plug: base material, nickel silver
- all scanning elements coated with Triflon
- cylinder Ø 33,9 mm
- cam fixation via 2 diagonal screws
- other screws on request

Included in delivery

- round cylinder without rose, without fixing screw

Assembly & operation

- screw the cylinder in the foreseen mortise lock with inside thread
- fixing with set screw from mortise lock

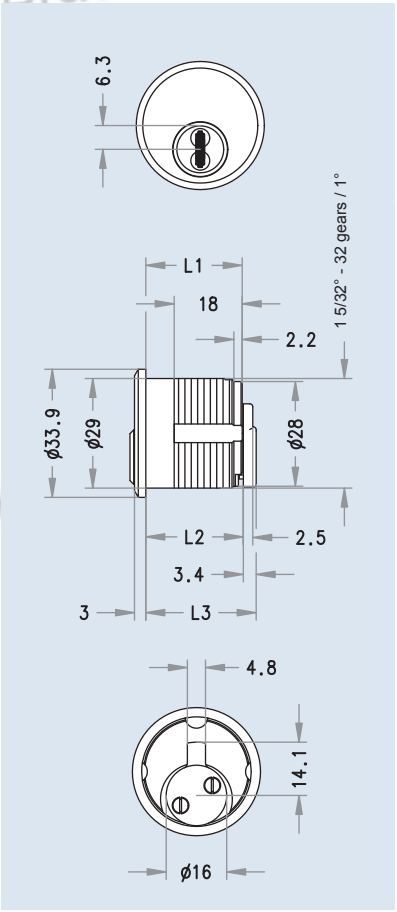

www.Bravite.com

www.Bravite.com
www.Bravite.com
www.Bravite.com
www.Bravite.com
www.Bravite.com
www.Bravite.com
www.Bravite.com

Scandinavian rim cylinder SKA



Ordering information

- SKA [finish], [security and usage options]

Applications and usage

- for mortise locks for Scandinavian cylinders
- for use on house doors, connecting doors, flat entry doors, security doors, metal frame doors,...

Functional characteristics

- lock is operable from one side with the key
- short horizontal tail bar
- 360 degrees possible locking movement

Security features

- hard metal drill protection in plug and housing
- vertical key insertion for optimal scan of the locking elements

Technical data

- cylinder housing base material: brass
- cylinder plug base material: brass
- all scanning elements coated with Triflon
- horizontal tail bar

Included in delivery

- locking cylinder

Assembly & operation

- easy cylinder installation in a prepared empty cylinder aperture
- reverse cylinder fixation

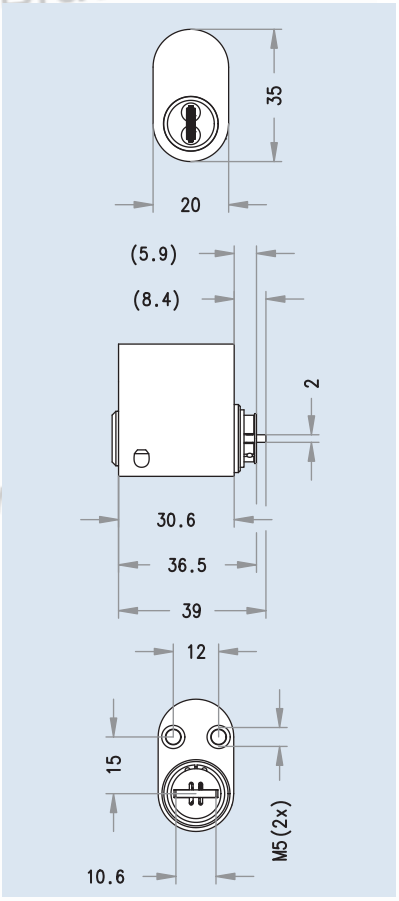

Finishes

Finishes	Abbreviations	Standard	Surcharge
Polished brass lacquered	MP	●	
Satin nickel	NI	●	
Polished nickel	NP		O
Satin chrome	CR		O
Polished chrome	CP		O
Patinated black	PS		O
Patinated brown	PB		O
Satin brass	MS		O
PVD coated	PVD-MS		O

www.Bravite.com

Scandinavian rim cylinder SKA/N (Norway Type)



Ordering information

- SKA/N [finish], [security and usage options]

Applications and usage

- for mortise locks for Scandinavian cylinders
- for use on house doors, connecting doors, flat entry doors, security doors, metal frame doors,...

Functional characteristics

- lock is operable from one side with the key
- short horizontal tail bar
- 360 degrees possible locking movement

Security features

- hard metal drill protection in plug and housing
- vertical key insertion for optimal scan of the locking elements

Technical data

- cylinder housing base material: brass
- cylinder plug base material: brass
- all scanning elements coated with Triflon
- horizontal tail bar

Included in delivery

- locking cylinder without screws

Montage & Betrieb

- easy cylinder installation in a prepared empty cylinder aperture
- lateral cylinder fixation 3/16“

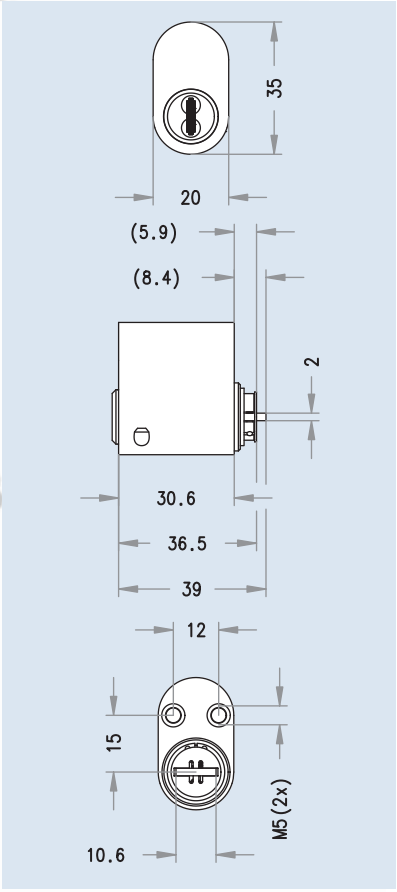

Finishes

Finishes	Abbreviations	Standard	Surcharge
Polished brass lacquered	MP	●	
Satin nickel	NI	●	
Polished nickel	NP		O
Satin chrome	CR		O
Polished chrome	CP		O
Patinated black	PS		O
Patinated brown	PB		O
Satin brass	MS		O
PVD coated	PVD-MS		O

www.Bravite.com

Scandinavian double cylinder SKDC



Ordering information

- SKDC [finish], [security and usage options]

Applications and usage

- for mortise locks for Scandinavian cylinders
- for use on the inside area of house doors, connecting doors, flat entry doors, security doors, metal frame doors,...

Functional characteristics

- lock is operable from one side with the key
- short horizontal tail bar
- 360 degrees possible locking movement
- suitable as second part for Scandinavian double cylinder (SKDC)

Security features

- vertical key insertion for optimal scan of the locking elements

Technical data

- cylinder housing base material: brass
- cylinder plug base material: brass
- all scanning elements coated with Triflon
- horizontal tail bar

Assembly & operation

- easy cylinder installation in a prepared empty cylinder aperture

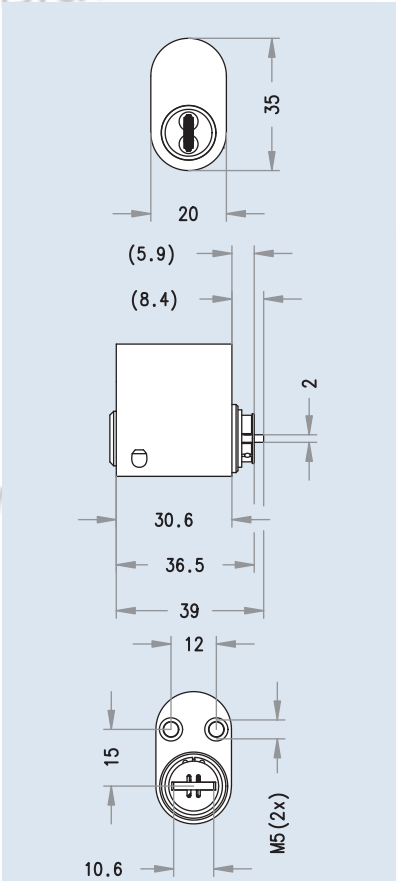

Finishes

Finishes	Abbreviations	Standard	Surcharge
Polished brass lacquered	MP	●	
Satin nickel	NI	●	
Polished nickel	NP		O
Satin chrome	CR		O
Polished chrome	CP		O
Patinated black	PS		O
Patinated brown	PB		O
Satin brass	MS		O
PVD coated	PVD-MS		O

www.Bravite.com

Scandinavian inside cylinder SKI



Ordering information

- SKI [finish], [security and usage options]

Applications and usage

- for mortise locks for Scandinavian cylinders
- for use on the inside area of house doors, connecting doors, flat entry doors, security doors, metal frame doors,...

Functional characteristics

- lock is operable from one side with the key
- short horizontal tail bar
- 360 degrees possible locking movement
- suitable as second part for Scandinavian double cylinder (SKA+SKI)

Security features

- vertical key insertion for optimal scan of the locking elements

Technical data

- cylinder housing base material: brass
- cylinder plug base material: brass
- all scanning elements coated with Triflon
- horizontal tail bar

Included in delivery

- locking cylinder with 2 fixing screws

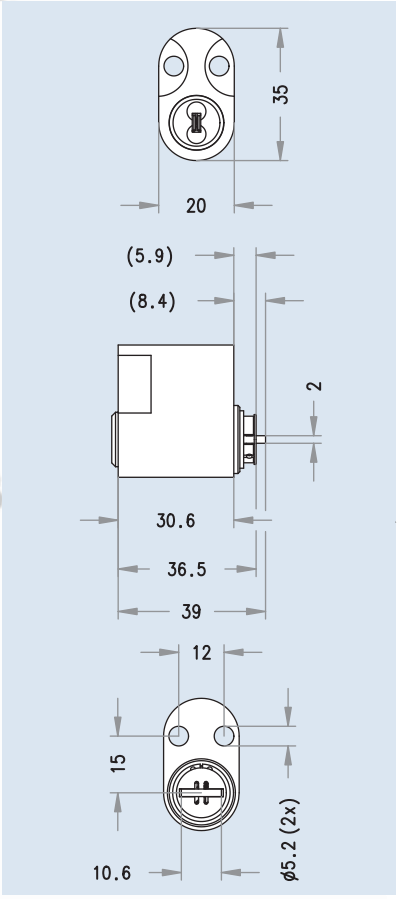

Assembly & operation

- easy cylinder installation in a prepared empty cylinder aperture
- continuous bores for screw connection with outside cylinders

Finishes

Finishes	Abbreviations	Standard	Surcharge
Polished brass lacquered	MP	●	
Satin nickel	NI	●	
Polished nickel	NP		O
Satin chrome	CR		O
Polished chrome	CP		O
Patinated black	PS		O
Patinated brown	PB		O
Satin brass	MS		O
PVD coated	PVD-MS		O

www.Bravite.com

Product catalogue, Release 01/10/2009
Errors and misprints excepted. Subject to technical change without notice.

Thumbturn cylinder KZ with adabtable thumbturn axis

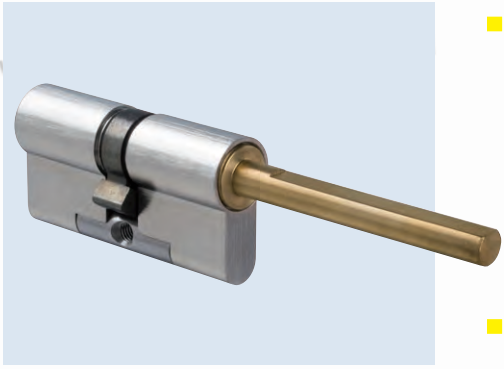

Ordering information

- KZ cylinder length A/B (A=outer side; B=inner side (thumbturn side)) [security and usage options]
- [finish]/[thumbturn design]

Applications and usage

- for mortise locks per DIN or ÖNORM
- for mortise locks per harmonised European norms
- for house doors, connecting doors, flat entry doors, security doors, metal frame doors, ...
- for break-in resistant doors of resistance class Wz6

Functional characteristics

- lock is operable from the outside with a key
- thumbturn on the inside to lock and unlock the door
- 360 degree cam movement

Security features

- hard metal drilling protection for the outside plug and housing
- pulling protection through chrome/ nickel connection rod
- vertical key insertion for optimal scan of locking elements

Technical data

- cylinder housing: base material, brass
- cylinder plug: base material, brass
- all scanning elements coated with Triflon
- cam base position, 30 degrees
- cam width 9.3 mm
- modular cylinder structure
- Finishes: satin nickel-plated, satin brushed, polished lacquer

Included in delivery

- locking cylinder with thumbturn and fixing screw

Assembly & operation

- easy cylinder installation in a prepared, empty cylinder aperture
- cylinder overhang may not exceed 3 mm for security-relevant doors
- elongated thumbturn axis with flattering for thumbturn fixation with screws
- if necessary, inside thumbturn can be removed with a tool
- cylinder fixation via a M5 fastener bore hole

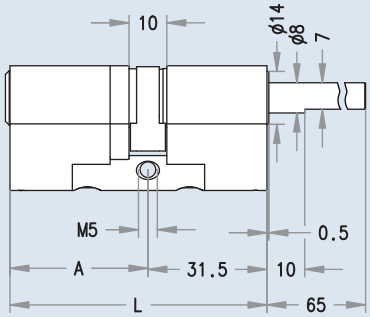

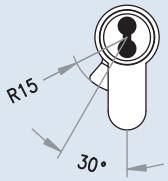

www.Bravite.com

www.Bravite.com
www.Bravite.com
www.Bravite.com
www.Bravite.com
www.Bravite.com
www.Bravite.com
www.Bravite.com

Cam variants

Applications and usage

- for cam locks MB19, MB23, MB30, ZB27, ZB27K, MB20GT, MB23G, MB23GT, MB30MB, MB30

Attention: cam variants do not apply to MRH22 and SRZ22

5088

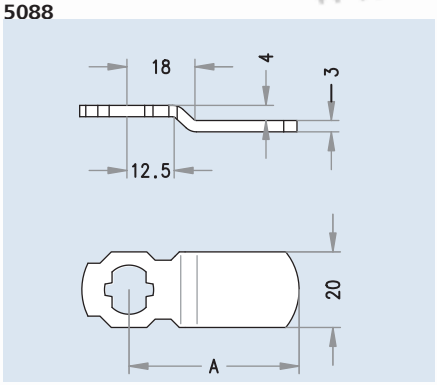

A	33,5	45	65

5092

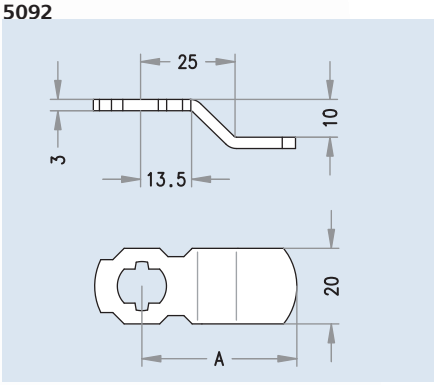

A	41	48,5	52,5

5072

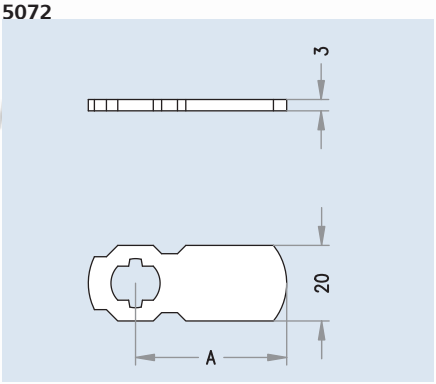

A	19	28	34	37	40	45	50
	55	60	65	70	75	80	

5089

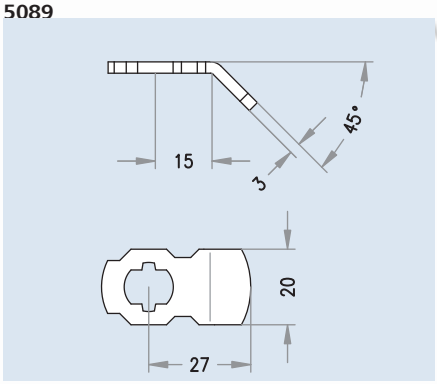

5094

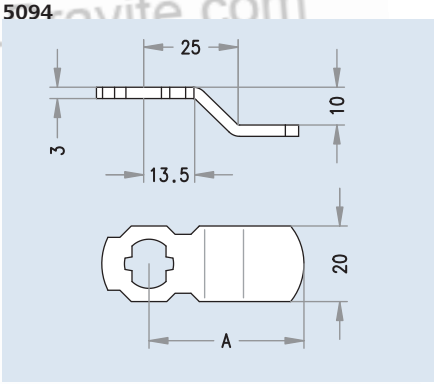

A	33,5	41	59

5073

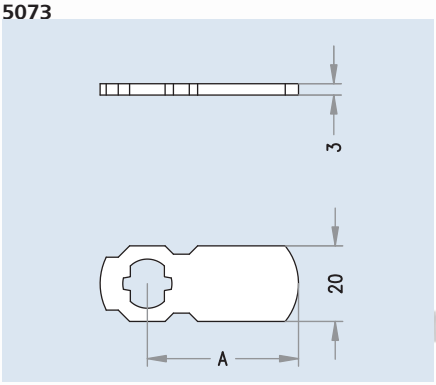

A	27	34	36	40	45	50
	55	60	65	70	75	80

5090

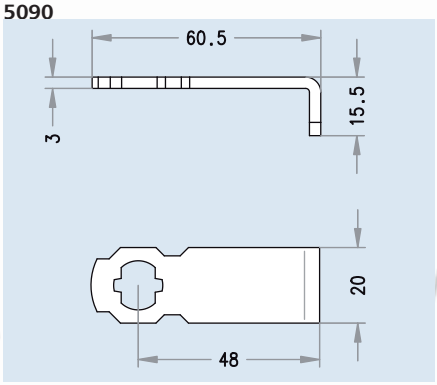

5095

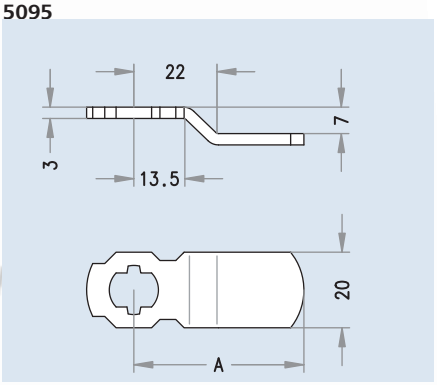

A	45	50

5087

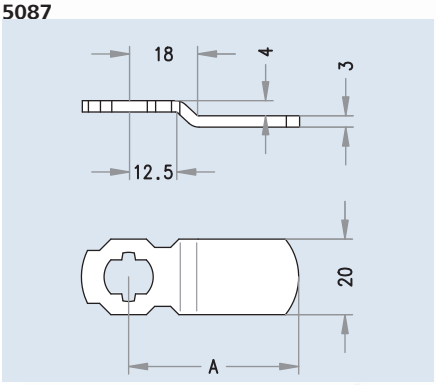

A	33,5	40	45	65

5091

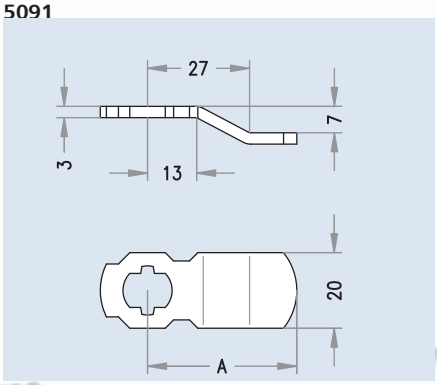

A	39,5	59	65,5

5096

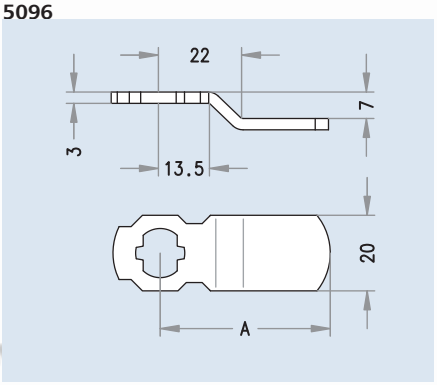

A	33,5	45

www.Bravite.com

Product catalogue, Release 01/10/2009
Errors and misprints excepted. Subject to technical change without notice.

Cam variants

5097

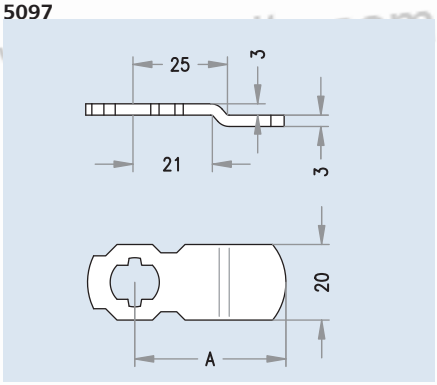

A	33,5	37	40	45	50	55	70

5099D

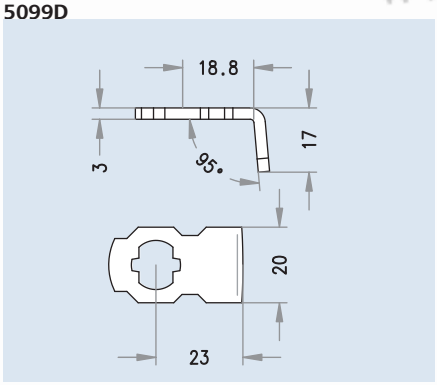

EVVA, storage, Zwick mailbox systems

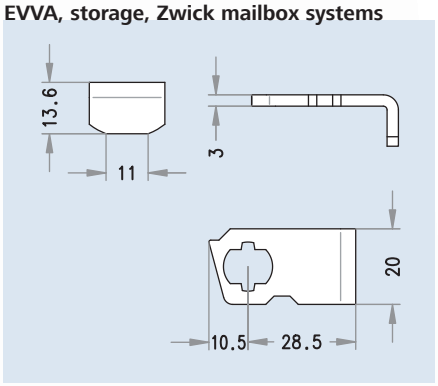

5097S

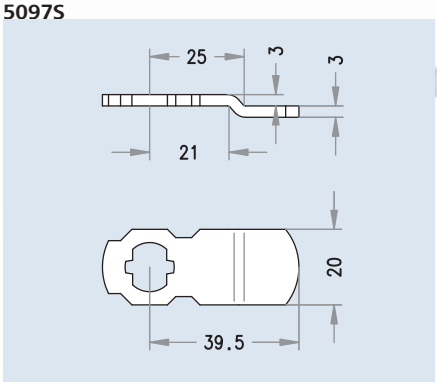

hook

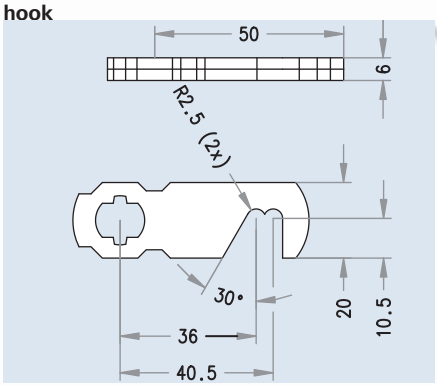

special mailbox systems

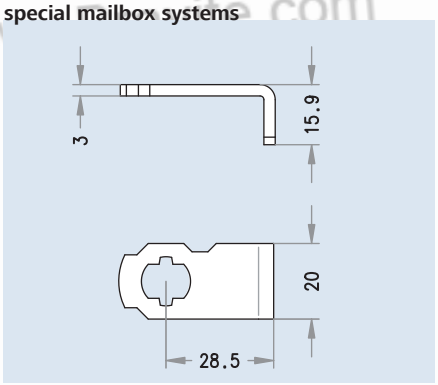

5098

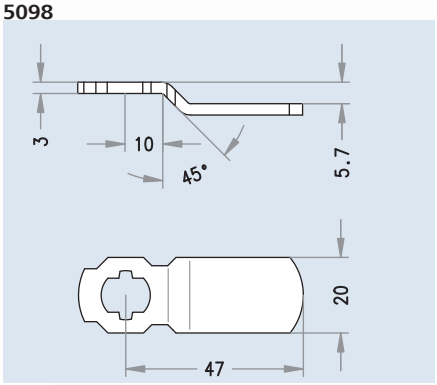

hook2

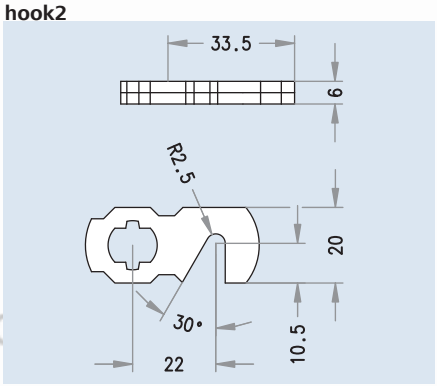

RENZ3

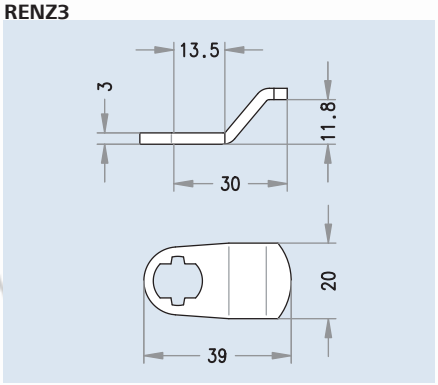

5099C

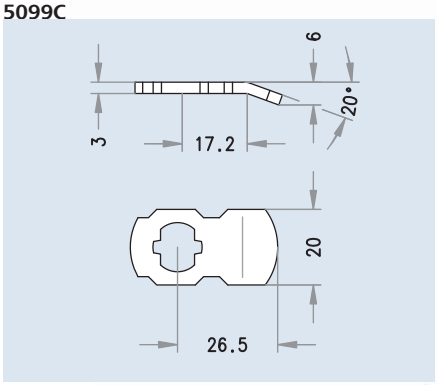

NSK

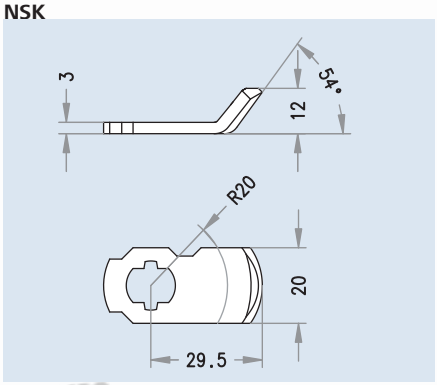

RENZ D

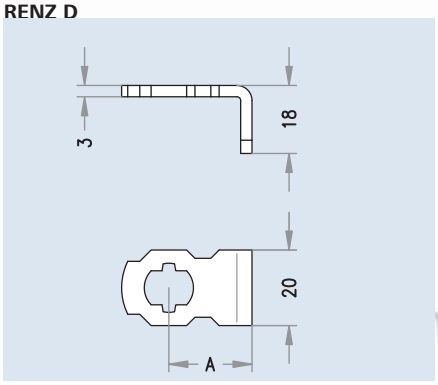

A	22	28

www.Bravite.com


EVVA
EVVA
EPS

www.Bravite.com

Conventional locking systems

EVVA offers numerous, proven, conventional locking systems that were developed according to the pin tumbler or locking pin principle. These are restricted, patented or trademark protected and are suitable for a very broad range of applications.

Systems

- The systems are available in 2 different designs (compact or modular).

Features

- 5 or 6 tumblers
- for master key systems and keyed to differ
- key design
- product range
- applications
- security levels
- attack resistance

Key duplication security

- Organisational protection through a legitimating procedure for key orders
- Legal protection through patents and other legal precautions
- Medium technical key protection

Cylinder security

- Depending on the scope of application, locking cylinders can be equipped with various additional security features

The illustrations in this section are taken from various different systems and have only symbolic character.

Length deviations of 0.5 mm per cylinder side possible.

System Overview

www.Bravite.com

OP – Open Profile
- 5 or 6 pin tumbler system (compact design)
- Suited for keyed to differ and keyed alike

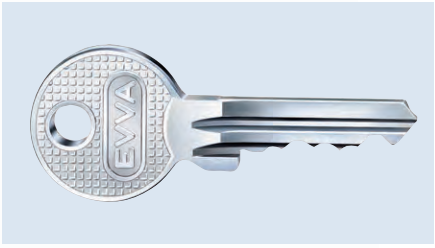

GPI – Ground Profile Intergrated
- 5 or 6 pin tumbler system (compact design) huge variety of length profiles
- Suited for keyed to differ, keyed alike, Master Key Systems or Grand Master Key Systems



DPS – Double Profile System
- 5 or 6 pin tumbler system (compact design)
- 5 or 6 slider system (modular design)
- Different length profiles in combination with side bar technology
- For keyed to differ, keyed alike, Master Key Systems or Grand Master Key Systems and big Grand Master Key Systems
- Patented
- Standard picking and drilling protection
- Security rating according to EN 1303:2005 (key related security grade 6, attack resistance grade 2)

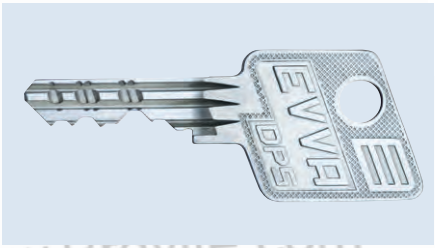

DPX – Three (Tripple) Profile System
- 5 or 6 pin tumbler system (compact design)
- Different length profiles in combination with duplex side bar technology
- For keyed to differ, keyed alike, Master Key Systems or Grand Master Key Systems and big Grand Master Key Systems
- Patented
- Available standard picking and drilling protection
- Security rating according to EN 1303:2005 (key related security grade 6, attack resistance grade 2)

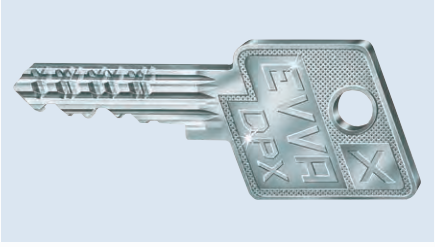

Product catalogue, Release 01/10/2009
Errors and misprints excepted. Subject to technical change without notice.

www.Bravite.com

DPI – Double Profile Integrated

- 5 or 6 pin tumbler system (compact design)
- 5 or 6 slider system (modular design)
- Different length profiles in combination with side bar technology
- For keyed to differ, keyed alike, Master Key Systems or Grand Master Key Systems and big Grand Master Key Systems
- Patented
- Standard picking and drilling protection
- Security rating according to EN 1303:2005 (key related security grade 6, attack resistance grade 2)

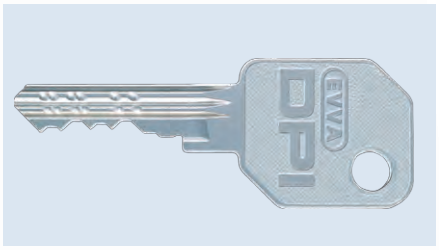

ALS – Adapted Length Profile System

- 5 or 6 pin tumbler system (compact design)
- Different length profiles in combination with an additional profile on the key tip
- For keyed to differ, keyed alike and Master Key Systems
- Patented
- Standard picking and drilling protection
- Security rating according to EN 1303:2005 (key related security grade 6, attack resistance grade 2)

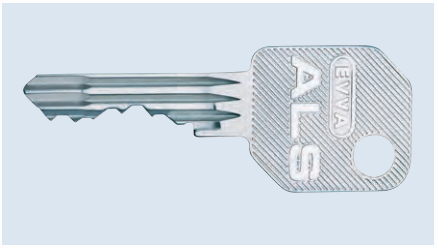

EPS – Extended Profile System

- 5 or 6 pin tumbler system (compact design)
- 5 or 6 slider system (modular design)
- Patented length profile and cross profile for double control in combination with side bar technology
- For keyed to differ, keyed alike, Master Key Systems or Grand Master Key Systems and big Grand Master Key Systems
- Patented
- Standard picking and drilling protection
- Security rating according to EN 1303:2005 (key related security grade 6, attack resistance grade 2)

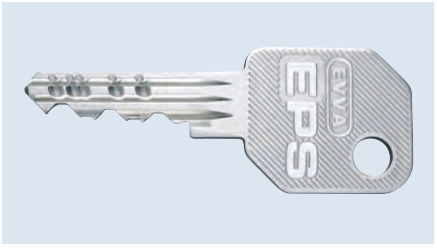

DPE – Double-Profile System-Extended

- 6 slider system (modular design)
- Length profile and cross profile with additional 7th locking element
- For keyed to differ, keyed alike, Master Key Systems or Grand Master Key Systems and big Grand Master Key Systems
- Patented
- Standard picking and drilling protection

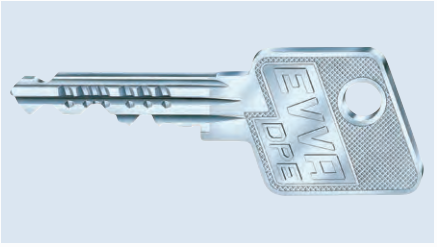

System/Design	patented	certificate	Compact 5pin	Compact 6pin	Modular 5pin	Modular 6pin
OP	–	–	●	●	–	–
GPI	●	–	●	●	·	·
DPS	●	●	●	●	●	●
DPX	●	●	●	●	–	–
DPI	●	●	●	●	●	●
ALS	●	●	●	●	–	–
EPS	●	●	●	●	●	●
DPE	●	●	–	–	–	●

DPE modular design differs in length from the other modular designs because of the additional 7th locking element

EPS5 standard key

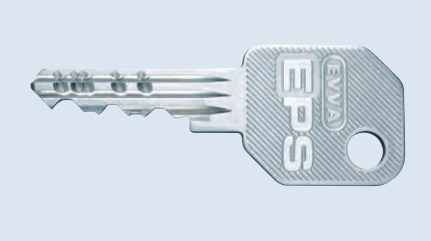

Technical data
- key made of an especially durable nickel silver alloy

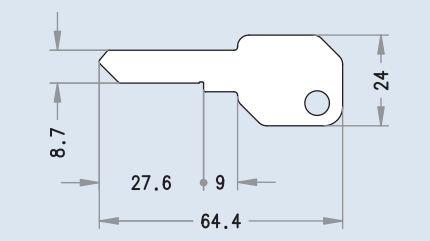

Ordering information
- SL [system and key number]

EPS6 standard key

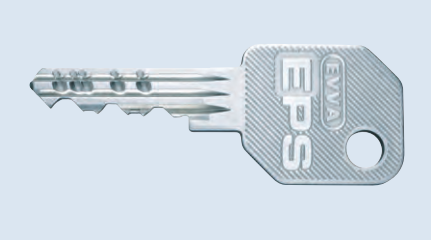

Technical data
- key made of an especially durable nickel silver alloy

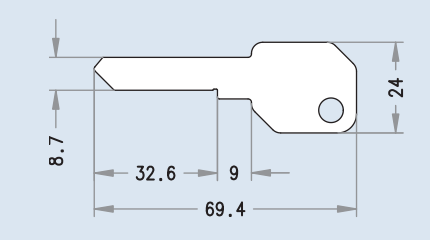

Ordering information
- SL [system and key number]

EPS key with plastic cap



Technical data
- key made of an especially durable nickel silver alloy
- key cap of plastic, colour: anthracite
- key upper section of plastic, colour: red, blue, yellow, green

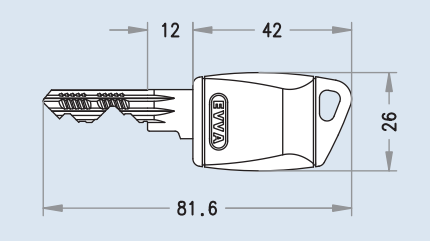

Ordering information
- SLKA [system and key number]
- when not otherwise specified, key has anthracite colour
- or key upper section in red, blue, green, yellow

www.Bravite.com

EPS5 additional numeration

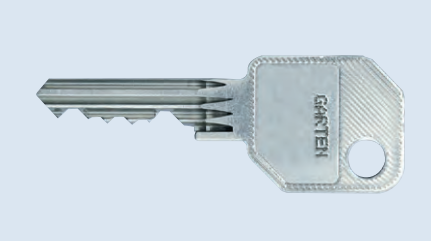

Ordering information

- SL [system and key number] designation/ number per customer request when technically possible, up to 18 characters (no special characters)

Technical data

- numeration according to customer request (in addition to system number and key number), e.g. "garden"
- running key numeration (keys with identical authorities receive running number)
- key made of an especially durable nickel silver alloy

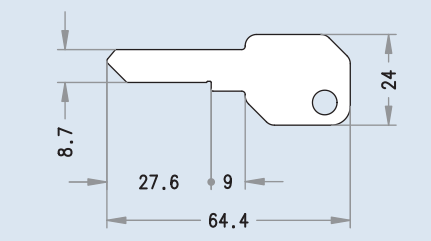

EPS6 additional numeration

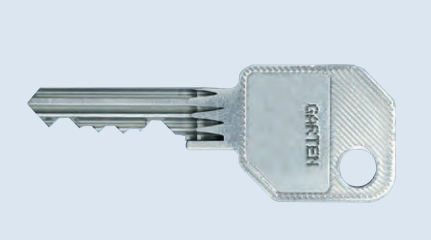

Ordering information

- SL [system and key number] designation/ number per customer request when technically possible, up to 18 characters (no special characters)

Technical data

- numeration according to customer request (in addition to system number and key number), e.g. "garden"
- running key numeration (keys with identical authorities receive running number)
- key made of an especially durable nickel silver alloy

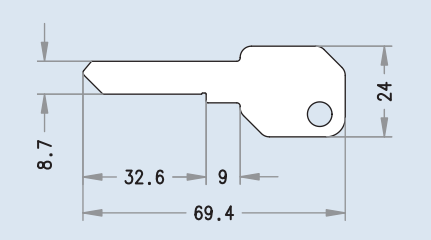

www.Bravite.com

EPS proximity combi-key



Technical data

- key with integrated electronic identification medium (non-contact)
- key head of durable polycarbonate, colour: anthracite

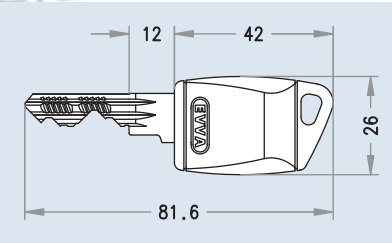

Ordering information

- SL [system and key number] CCM1KES (Mifare 1k, anthracite)
- SL [system and key number] CCM4KES (Mifare 4k, anthracite)
- SL [system and key number] CCD4KES (Desfire 4k, anthracite)
- SL [system and key number] CCL1KES (Legic 1k, anthracite)
- red or yellow cap colour possible

EPS iButton combi-key



Technical data

- key with integrated electronic identification medium (contact)
- key head of durable polycarbonate, colour: anthracite

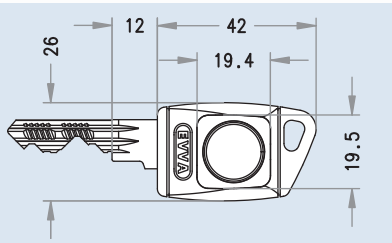

Ordering information

- SL [system and key number] CEIRWES (iButton R/W 512B)

www.Bravite.com

EPS iButton combi-key upgrade variants



Ordering information

- SL [system and key number] CE000TS

Technical data

- key is prepared for the integration of electronic upgrade media (non-contact and contact)
- key head of durable polycarbonate, without electronics, colour: anthracite
- key can be equipped on-site by the customer with an upgrade medium

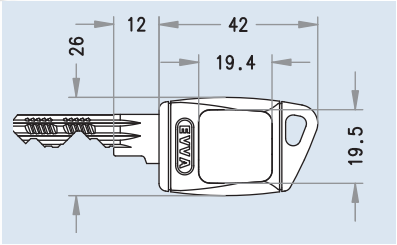

MIFARE 1 K/Legic 1 K combi-key upgrade medium



Ordering information

- CMM1KE0
- CML1KE0

Technical data

- key cap with integrated electronic identification medium for use in combi-key upgrade variants
- Mifare 1K identification medium
- Legic 1K identification medium

iButton R/W 512 B combi-key upgrade medium



Ordering information

- CMIRWE0

Technical data

- key cap with integrated electronic identification medium for use in "combi-key upgrade variants"
- iButton R/W 512B identification medium

www.Bravite.com

Product catalogue, Release 01/10/2009
Errors and misprints excepted. Subject to technical change without notice.

Double cylinder DZ



5-pin compact design

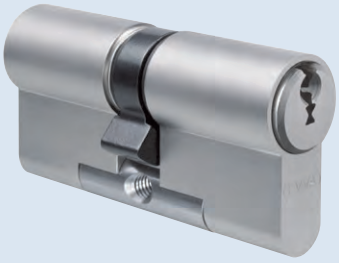

5-pin modular design

Ordering information

- DZ cylinder length A/B,
  [M = modular], [finish], [security and usage options]
- e.g. DZ 31/41, M, Ni
  cylinder 31/41, modular design, nickel finish

Applications and usage

- for mortise locks per DIN or ÖNORM
- for mortise locks per harmonised European norms
- for mortise locks with profile cylinder apertures

Functional characteristics

- lockable from both sides with key
- 360 degree cam movement
- cam removal position 30 degrees (from the short side)

Technical data

- cylinder housing: base material, brass
- cylinder plug: base material, brass
- cam base position, 30 degrees
- cam width 9.3 mm

Included in delivery

locking cylinder with fixing screw

Assembly & operation

- easy cylinder installation in a prepared, empty cylinder aperture
- cylinder overhang may not exceed 3 mm for security-relevant doors
- cylinder fixation via a M5 fastener bore hole

Finishes

Finishes	Abbreviations	Standard	Surcharge
Satin brass	MS	●	
Satin nickel	NI	●	
Polished nickel	NP		O
Satin chrome	CR		O
Polished chrome	CP		O
Patinated black	PS		O
Patinated brown	PB		O
Polished brass lacquered	MP		O
PVD coated	PVD-MS		O

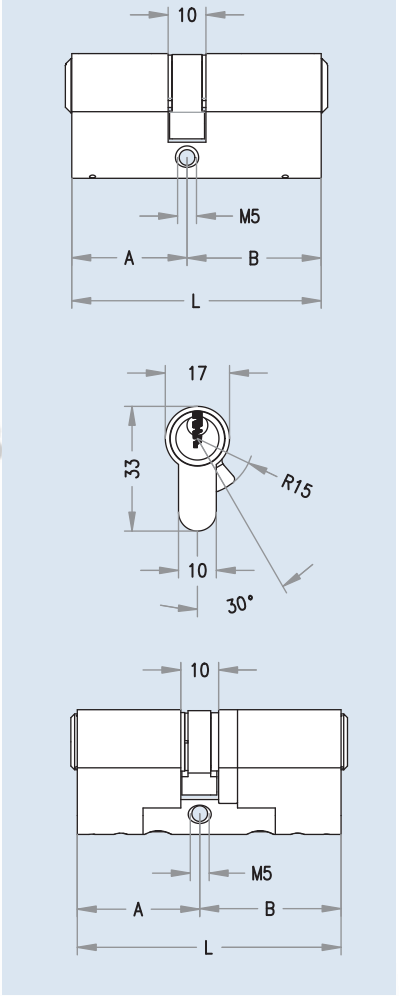

Cylinder lengths

5-pin compact design

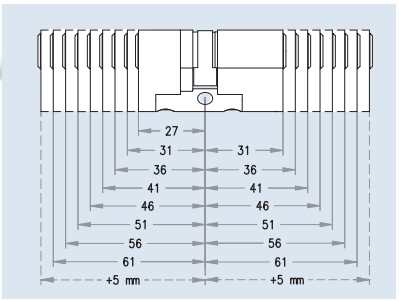

5-pin modular design

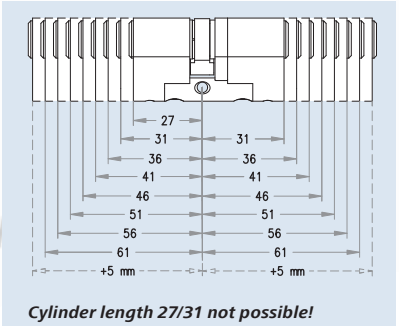

Cylinder length 27/31 not possible!

Product catalogue, Release 01/10/2009
Errors and misprints excepted. Subject to technical change without notice.

www.Bravite.com

Double cylinder DZ



6-pin compact design



6-pin modular design

Ordering information

- DZ cylinder length A/B,
  [M = modular], [finish], [security and usage options]
- e.g. DZ 31/41, M, Ni
  cylinder 31/41, modular design, nickel finish

Applications and usage

- for mortise locks per DIN or ÖNORM
- for mortise locks per harmonised European norms
- for mortise locks with profile cylinder apertures

Functional characteristics

- lockable from both sides with key
- 360 degree cam movement
- cam removal position, 30 degrees (from the short side)

Technical data

- cylinder housing: base material, brass
- cylinder plug: base material, brass
- cam base position, 30 degrees
- cam width, 9.3 mm

Included in delivery

locking cylinder with fastening screw

Assembly & operation

- easy cylinder installation in a prepared, empty cylinder aperture
- cylinder overhang may not exceed 3 mm for security-relevant doors
- cylinder fixation via a M5 fastener bore hole

Finishes

Finishes	Abbreviations	Standard	Surcharge
Satin brass	MS	●	
Satin nickel	NI	●	
Polished nickel	NP		O
Satin chrome	CR		O
Polished chrome	CP		O
Patinated black	PS		O
Patinated brown	PB		O
Polished brass lacquered	MP		O
PVD coated	PVD-MS		O

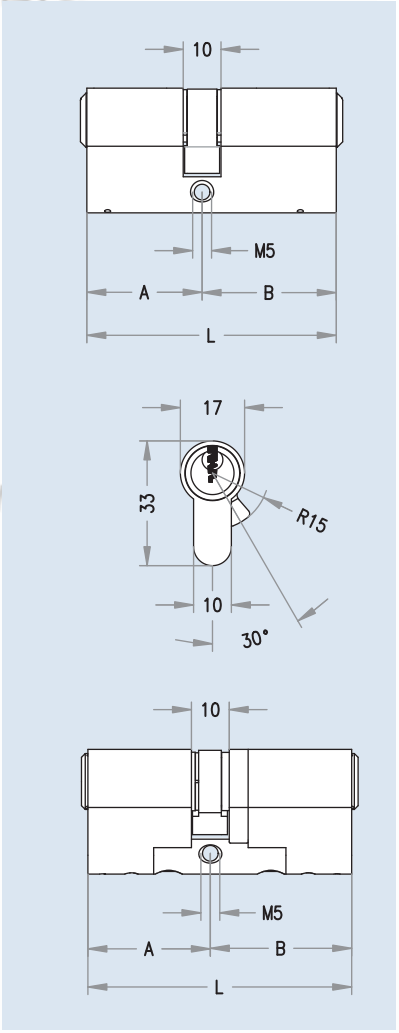

Cylinder lengths

6-pin compact design

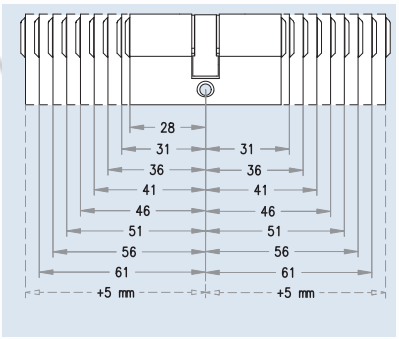

6-pin modular design

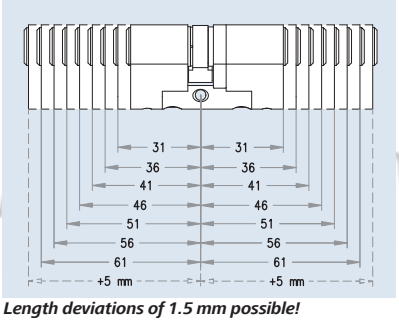

Length deviations of 1.5 mm possible!

www.Bravite.com

Double cylinder DZ | Options

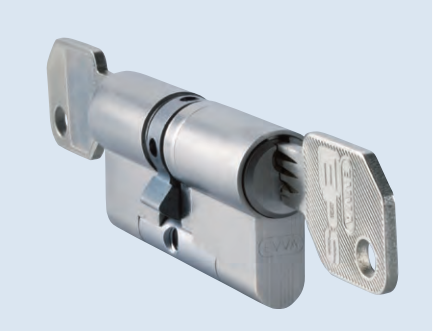

BSZ - external key override double cylinder, danger function for double cylinder

Permits operation of the cylinder even when an authorised key is inserted in the opposite side.

5- and 6-pin modular design

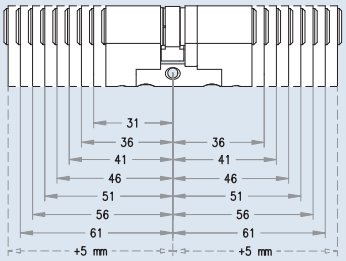

5-pin compact design available from 27/36
6-pin compact design available from 28/31

Ordering information

- DZ cylinder length A/B, [finish]
  BSZ



NS - nickel silver plugs

for cylinders subjected to heavy duty, e.g. central cylinders on frequently opened building doors, ...

Higher wear resistance due to a special nickel silver alloy of the plug.

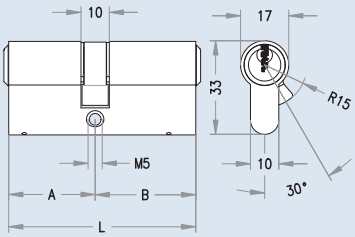

Ordering information

- DZ cylinder length A/B, [finish]
  – NS-BS (both sides)
  – NS-ES (one side, of symmetric cylinders)
  – NS-KS (short side)
  – NS-LS (long side)



KZS – special drilling and pulling protection

Plug pulling with special tools is prevented by special hard metal pins. Increased drilling protection is also provided. KZS protects against visible opening methods and exceeds the protective goals of norms.

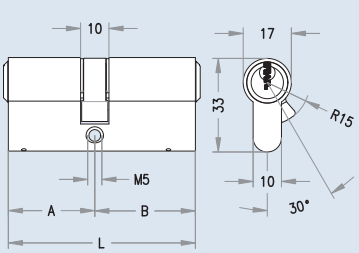

Ordering information

- DZ cylinder length A/B, [finish]
  – KSZ-ES (one side, of symmetric cylinders)
  – KZS-BS (both sides)
  – KZS-KS (short side)
  – KZS-LS (long side)

Product catalogue, Release 01/10/2009
Errors and misprints excepted. Subject to technical change without notice.

www.Bravite.com

Double cylinder DZ | Options

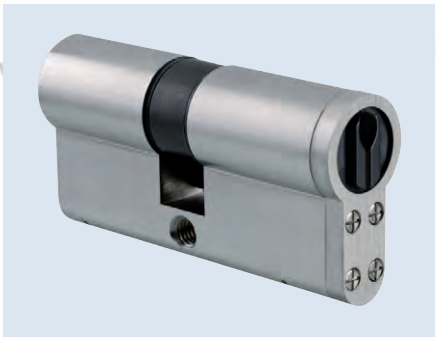

Ordering information

- DZ cylinder length A/B, [finish]
  – SSW-BS (both sides)
  – SSW-ES (one side, of symmetric cylinders)
  – SSW-KS (short side)
  – SSW-LS (long side)

SSW – Protection mechanism against dust and weathering influences (dustcover)
Spring-loaded shutter plates integrated into the cylinder that automatically open or close when the key is inserted or removed.

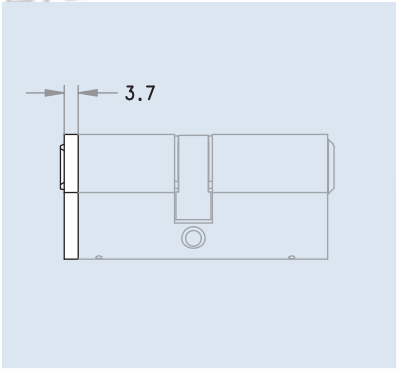



Ordering information

- DZ cylinder length A/B, [finish] SEW

SEW – Seawater resistant model
For cylinders exposed to more severe environmental influences. Corrosion-susceptible cylinder parts are provided with a special surface treatment.

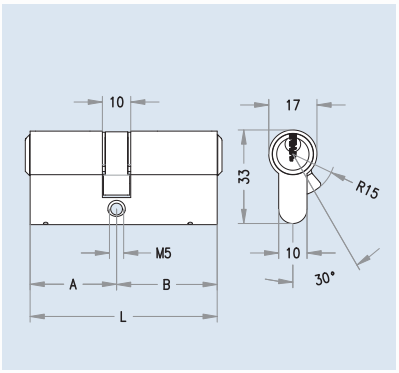



Ordering information

- DZ cylinder length A/B, [finish] VdS

VdS cylinder design
VdS B-certified cylinder for installation in switchgear facilities (alarm systems).
Increased resistance to visible and non-visible opening techniques.
KZS security option is integrated.



www.Bravite.com

Double cylinder DZ | Options



ZR10 cogwheel
(10 teeth)
The cylinder is prepared for multi-point locks or special mortise locks that are activated by way of a gear ring or a toothed rod.

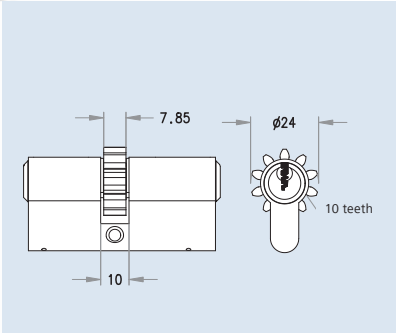

Ordering information
- DZ cylinder length A/B, [finish] ZR10



ZR18 cogwheel
(18 teeth)
The cylinder is prepared for multi-point locks or special mortise locks that are activated by way of a gear ring or a toothed rod.

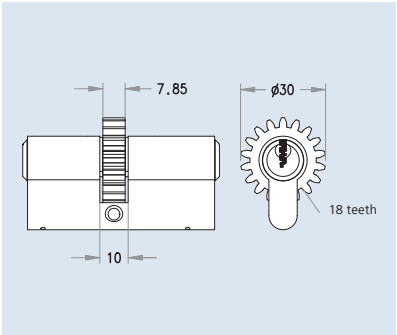

Ordering information
- DZ cylinder length A/B, [finish] ZR18



Double cam BIF
The cylinder is suited for manufacturer-specified locks in a Biffar door.

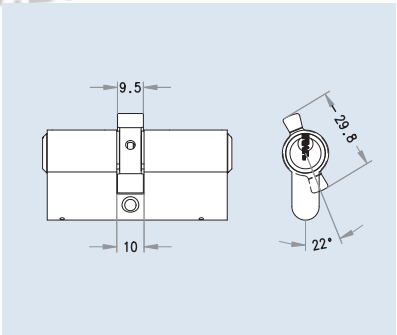

Ordering information
- DZ cylinder length A/B, [finish] BIF
- 22 degree cam position, from short cylinder side
- Please observe the door manufacturer's instructions!

www.Bravite.com

Double cylinder DZ | Options

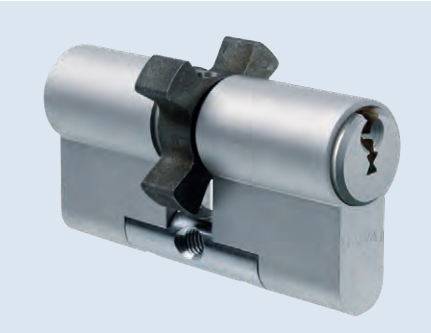

STEN star cam
The cylinder is prepared for ABUS type PR1500, PR1600 bar locks

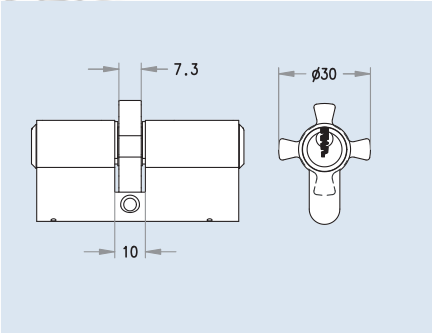

Ordering information
- DZ cylinder length A/B, [finish] STEN



Construction keying – VAR
If an authorised key is lost or stolen, the cylinder can be mechanically recoded with the Vario B key in such a manner that the lost/stolen key cannot operate the lock.

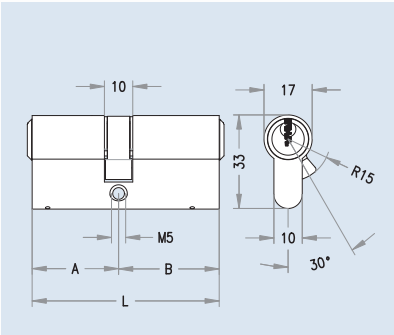

Ordering information
- DZ cylinder length A/B, [finish] Vario



Four-eyes principle
Duplo – DUP
The Duplo key only operates the latch (latch retraction), whereas a super-ordinate key can operate both latch and latch bolt. Duplo key users can, for example, lock the door with the key during the day; the owner can lock the door at any time with his key.

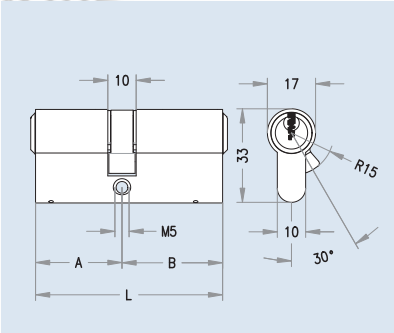

Ordering information
- DZ cylinder length A/B, [finish],
  – DUP-BS (both sides)
  – DUP-ES (one side, of symmetric cylinders)
  – DUP-KS (short side)
  – DUP-LS (long side)

www.Bravite.com

Double cylinder DZ | Options



Ordering information

- DZ cylinder length A/B, [finish] GEFE

GEFE – emergency key feature

A special emergency key can operate the cylinder even when an authorised key is inserted in the opposite side.

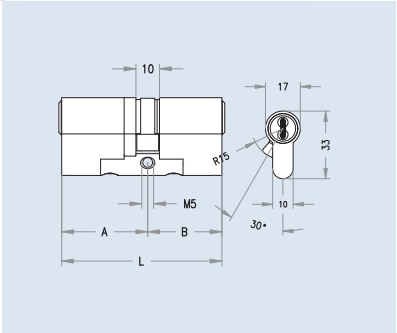



Ordering information

- DZ cylinder length A/B, [finish],
  - HOTE-BS (both sides)
  - HOTE-ES (one side, of symmetric cylinders)
  - HOTE-KS (short side)
  - HOTE-LS (long side)

HOTE – hotel function

A special HOTE emergency key can operate the cylinder in an emergency even when an authorised key is inserted in the opposite side. A cylinder with this feature is additionally marked with a red tracer (e.g. on the outside).

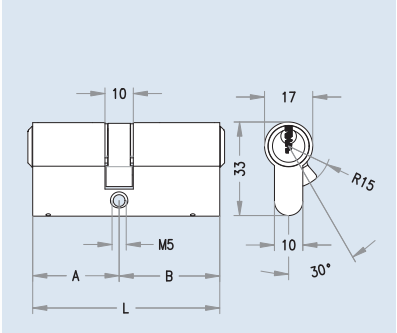



Ordering information

- DZ cylinder length A/B, [finish]
  ZVS-(ES/LS/KS)
  ZVS-ES (one sided, with symmetric cylinders)
  ZVS-LS (long cylinder side)
  ZVS-KS (short cylinder side)

Double cylinder with shortened body

Cylinder with shortened body, also for use in special metal frame doors with integrated security rose.

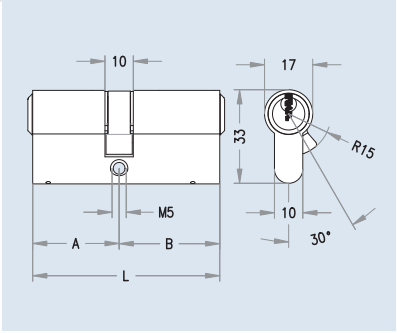

www.Bravite.com

Product catalogue, Release 01/10/2009
Errors and misprints excepted. Subject to technical change without notice.

Double cylinder DZ | Options



PA partner cylinder
The cylinder can only be operated when an authorised key is inserted in the opposite side.

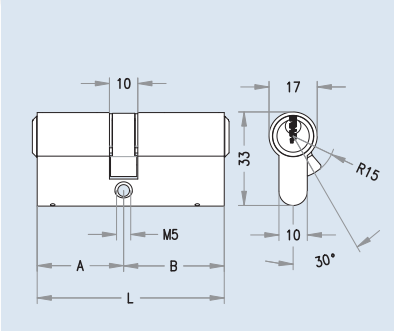

Ordering information
- DZ cylinder lengths A/B [finish] PA



USH different locking hierarchy
The cylinder has different A/B hierarchic authorisation levels, e.g. the outside can only be operated by a super-ordinate key, the inside operates with any authorised key.

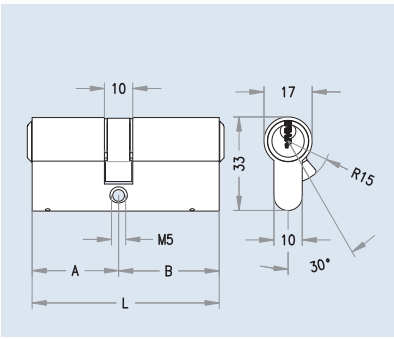

Ordering information
- DZ cylinder length A/B, [finish] USH;
- Specification of hierarchic authorisations per cylinder side (A/B)



Double cylinder with FL2 free-wheel function
Locking cylinder with 360 degree free-wheeling cam when key is not inserted. Coupling is engaged when the key tip is inserted.

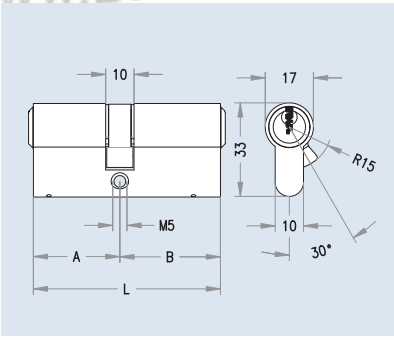

Ordering information
- DZ cylinder length A/B, [finish] FL2

www.Bravite.com

Double cylinder DZ | Options



Double cylinder with free-wheel function and positive decoupling
Locking cylinder with 360 degree free-wheeling and positive-action decoupling of the cam. Coupling engaged when the key tip is inserted.
Special cam shape.
Suitable for geared-lock anti-panic multiple latching.

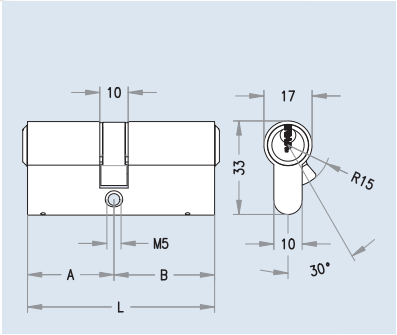

Ordering information

- DZ cylinder length A/B, [finish]
  FZG

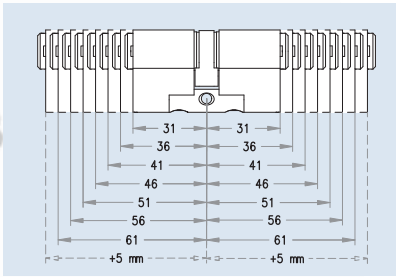

Options overview
ARS possible only in compact design,
VAR possible only in compact design,
S = Standard
● simple combination possible
ARS, VARIO,GEFE, HOTE and SG are only possible in compact design

		external key override	plug pulling protection	dust cover	sea water resistant	protection against breaking off	certified cylinder acc to VdS	wear resistance	cog wheel 10 teeth	cog wheel 18 teeth	double cam Biffar	star cam	construction keying	emergency function	hotel function	shortened body	partner function	different locking hierarchy	free wheel cam	four-eyes principle
		BSZ	KZS	SSW	SEW	ARS	VDS	NS	ZR10	ZR18	BIF	STEN	VAR	GEFE	HOTE	ZVS	PA	USH	FREI	DUP
external key override	BSZ	-	●	●	●	-	●	S	●	●	●	●	●	-	-	●	-	●	-	-
plug pulling protection	KZS	●	-	-	●	-	S	S	●	●	●	●	●	●	-	●	●	●	●	-
dust cover	SSW	●	●	●	●	-	●	S	●	●	●	●	●	●	-	-	●	●	●	-
sea water resistant	SEW	●	-	●	-	-	●	S	●	●	●	●	●	●	-	●	●	●	●	-
protection against breaking off	ARS	-	-	-	-	-	-	-	-	-	-	-	-	-	-	-	-	-	-	-
certified cylinder acc to VdS	VDS	●	S	-	●	-	-	S	●	●	●	●	-	-	-	-	-	●	-	-
wear resistance	NS	S	S	S	S	-	S	-	S	S	S	S	S	S	-	S	S	S	S	-
cog wheel 10 teeth	ZR10	●	●	●	●	-	●	S	-	-	-	-	●	●	-	●	●	●	-	-
cog wheel 18 teeth	ZR18	●	●	●	●	-	●	S	-	-	-	-	●	●	-	●	●	●	-	-
double cam Biffar	BIF	●	●	●	●	-	●	S	-	-	-	-	●	●	-	●	●	●	-	-
star cam	STEN	●	●	●	●	-	●	S	-	-	-	-	●	●	-	●	●	●	-	-
construction keying	VAR	●	●	●	●	-	-	S	●	●	●	●	-	-	-	●	●	-	●	-
emergency function	GEFE	-	●	●	●	-	-	S	●	●	●	●	-	-	-	●	-	●	-	-
hotel function	HOTE	-	-	-	-	-	-	-	-	-	-	-	-	-	-	-	-	-	-	-
shortened body	ZVS	●	●	-	●	-	-	S	●	●	●	●	●	●	-	-	●	●	●	-
partner function	PA	-	-	●	●	-	-	S	●	●	●	●	●	-	-	●	-	●	-	-
different locking hierarchy	USH	●	●	●	●	-	-	S	●	●	●	●	-	-	-	●	●	-	●	-
free wheel cam	FREI	-	-	●	●	-	-	S	-	-	-	-	●	-	-	●	-	●	-	-
four-eyes principle	DUP	-	-	-	-	-	-	-	-	-	-	-	-	-	-	-	-	-	-	-

www.Bravite.com

Double cylinder DZ | Options



Double cylinder, one side slot
Is operable from one side with an authorised key and from the Flex side operable with a flat object.
Cam movement is 360 degrees and 30 degree cam removal position (from the short side).

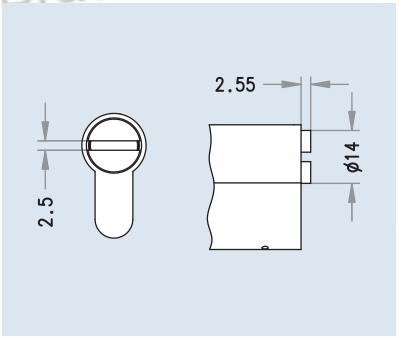

Ordering information
- DZ cylinder length A/B, [finish] Flex S-(ES/LS/KS)
- Flex S-ES (one sided, with symmetric cylinders)
- Flex S-LS (long cylinder side)
- Flex S-KS (short cylinder side)



Double cylinder, one side Allen socket
Is operable from one side with an authorised key and from the Flex side operable with a SW6 Allen wrench.
Cam movement is 360 degrees and 30 degree lock cam removal position (from the short side).

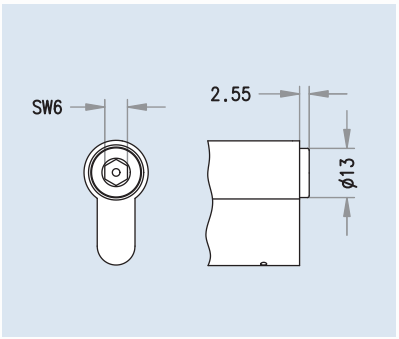

Ordering information
- DZ cylinder length A/B, [finish] (ES/LS/KS) [security, application and conve-nience options]
- Flex I6-ES
- Flex I6-LS
- Flex I6-KS



Double cylinder, one side square plug
Is operable from one side with an authorised key and from the Flex side operable with an 8 mm square wrench.
Cam lock movement is 360 degrees and 30 degree cam removal position (from the short side).

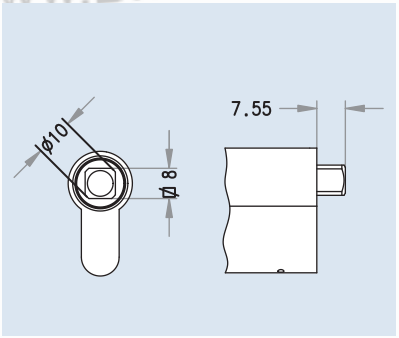

Ordering information
- DZ cylinder length A/B, [finish] (ES/LS/KS) [security, applica-tion and convenience options]
- Flex 4K-ES
- Flex 4K-LS
- Flex 4K-KS

www.Bravite.com

Double cylinder DZ | Options



Double cylinder, one side 8 mm three-square plug
Is operable from one side with an authorised key and from the Flex side operable with an 8 mm triangle wrench.
Cam movement is 360 degrees and 30 degree cam removal position (from the short side).

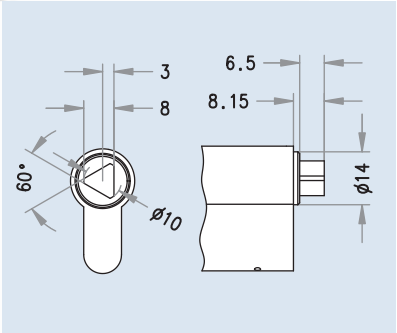

Ordering information
- DZ cylinder length A/B, [finish] (ES/LS/KS) [security, application and convenience options]
- Flex D8-ES
- Flex D8-LS
- Flex D8-KS



Double cylinder, one side 11 mm three-square plug
Is operable from one side with an authorised key and from the Flex side operable with an 11 mm triangle wrench.
Cam movement is 360 degrees and 30 degree cam removal position (from the short side).

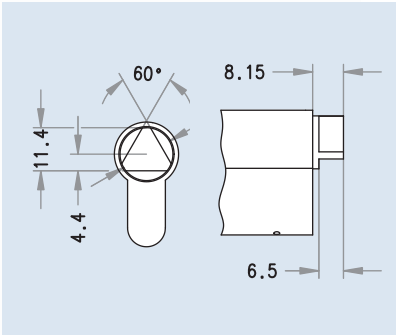

Ordering information
- DZ cylinder length A/B, [finish] (ES/LS/KS) [security, application and convenience options]
- Flex D11-ES
- Flex D11-LS
- Flex D11-KS



Double cylinder, one side 14 mm three-square plug
Is operable from one side with an authorised key and from the Flex side operable with a 14 mm triangle wrench.
Cam movement is 360 degrees and 30 degree cam removal position (from the short side).

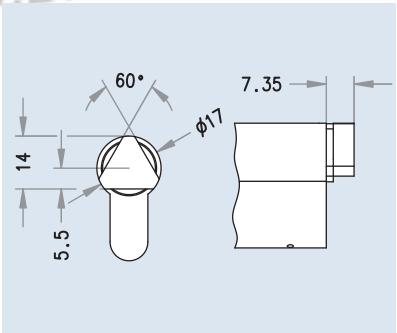

Ordering information
- DZ cylinder length A/B, [finish] (ES/LS/KS) [security, application and convenience options]
- Flex D14-ES
- Flex D14-LS
- Flex D14-KS

www.Bravite.com

Product catalogue, Release 01/10/2009
Errors and misprints excepted. Subject to technical change without notice.

Double cylinder DZ | Options



Ordering information

- DZ cylinder length A/B, [finish] Flex BL-(ES/LS/KS)
- Flex BL-ES (one side, with symmetric cylinders)
- Flex BL-LS (long cylinder side)
- Flex BL-KS (short cylinder side)

Double cylinder, one side blind

Is operable from one side with an authorised key but the other side is blind, preventing any operation.
Cam movement is 360 degrees and 30 degree cam removal position (from the short side)

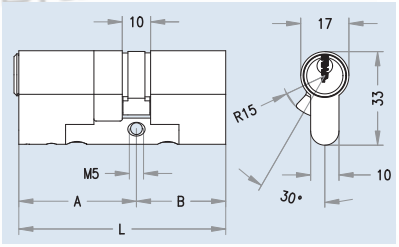

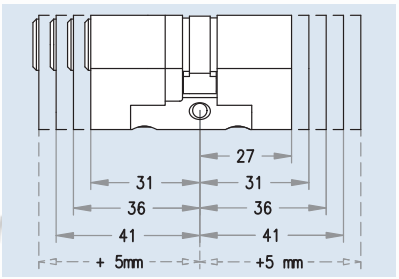



Ordering information

- DZ cylinder length A/B, [finish] BLIND

Double cylinder, both sides blind

The cylinder is blind on both sides which prevents operation of the mortise lock.
For doors that must not be locked but where the profile cylinder aperture must be closed.

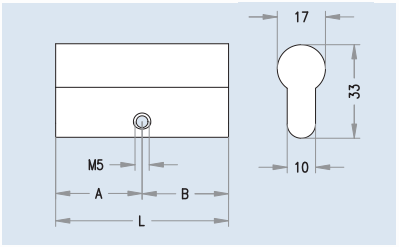

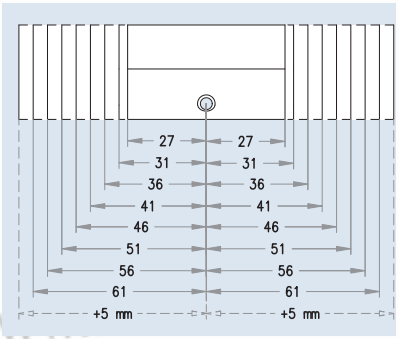

www.Bravite.com

KZ thumbturn cylinder



5-pin modular design

Ordering information

- KZ cylinder length A/B (A=outer side; B=inner side (thumbturn side)), [M = modular] [security and usage options]
- [finish]/[thumbturn design]
- when thumbturn design is not specified: standard AKN thumbturn

Applications and usage

- for mortise locks per DIN or ÖNORM
- for mortise locks per harmonised European norms
- for house doors, connecting doors, flat entry doors, security doors, metal frame doors, ...
- for break-in resistant doors of resistance class Wz6

Functional characteristics

- cylinder is operable from the outside with a key
- thumbturn on the inside to lock and unlock the door
- 360 degree cam movement

Security features

- hard metal drilling protection for the outside plug and housing
- pulling protection through chrome/ nickel linking axis (modular only)
- vertical key insertion for optimal scan of locking elements

Technical data

- cylinder housing: base material, brass
- all scanning elements coated with Triflon
- cam base position, 30 degrees
- cam width, 9.3 mm
- finishes: satin nickel-plated, satin brushed, polished lacquer

Included in delivery

- locking cylinder with thumbturn and fixing screw

Assembly & operation

- easy cylinder installation in a prepared, empty cylinder aperture
- cylinder overhang may not exceed 3 mm for security-relevant doors
- if necessary, inside thumbturn can be removed with a tool
- cylinder fixation via a M5 fastener bore hole

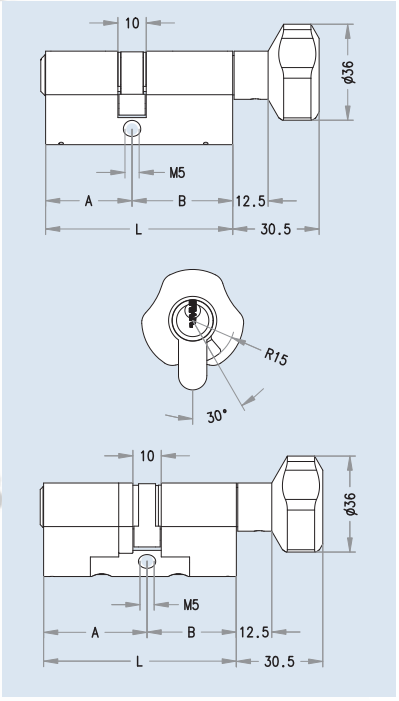

Cylinder lengths

5-pin compact design

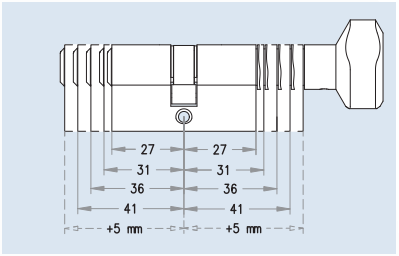

5-pin modular design

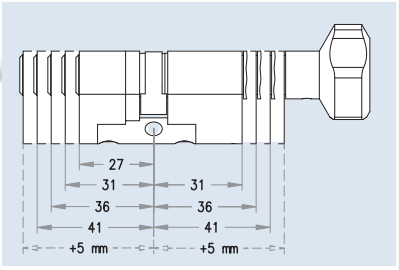

Finishes

Finishes	Abbreviations	Cylinder	AKN, KKN, FKN	RKN, MKN	OKN, OKNA	GKN
Satin brass	MS	●	●	●	●	●
Satin nickel	NI	●	●	●	●	●
Polished nickel	NP	○	○	○	○	○
Satin chrome	CR	○	○	○	○	○
Polished chrome	CP	○	○	○	○	○
Patinated black	PS	○	○	○	○	○
Patinated brown	PB	○	○	○	○	○
Polished brass lacquered	MP	○	○	○	○	○
PVD coated	PVD-MS	○	○	○		○
RAL colour	RAL					○

www.Bravite.com

Product catalogue, Release 01/10/2009
Errors and misprints excepted. Subject to technical change without notice.

KZ thumbturn cylinder



6-pin modular design

Ordering information

- KZ cylinder length A/B (A=outer side; B=inner side (thumbturn side)), [M = modular] [security and usage options]
- [finish]/[thumbturn design]
- when thumbturn design is not specified: standard AKN thumbturn

Applications and usage

- for mortise locks per DIN or ÖNORM
- for mortise locks per harmonised European norms
- for house doors, connecting doors, flat entry doors, security doors, metal frame doors, ...
- for break-in resistant doors of resistance class Wz6

Functional characteristics

- cylinder is operable from the outside with a key
- thumbturn on the inside to lock and unlock the door
- 360 degree cam movement

Security features

- hard metal drilling protection for the outside plug and housing
- pulling protection through chrome/ nickel linking axis (modular only)
- vertical key insertion for optimal scan of locking elements

Technical data

- cylinder housing: base material, brass
- all scanning elements coated with Triflon
- cam base position, 30 degrees
- cam width, 9.3 mm
- finishes: satin nickel-plated, satin brushed, polished lacquer

Included in delivery

- locking cylinder with thumbturn and fixing screw

Assembly & operation

- easy cylinder installation in a prepared, empty cylinder aperture
- cylinder overhang may not exceed 3 mm for security-relevant doors
- if necessary, inside thumbturn can be removed with a tool
- cylinder fixation via a M5 fastener bore hole

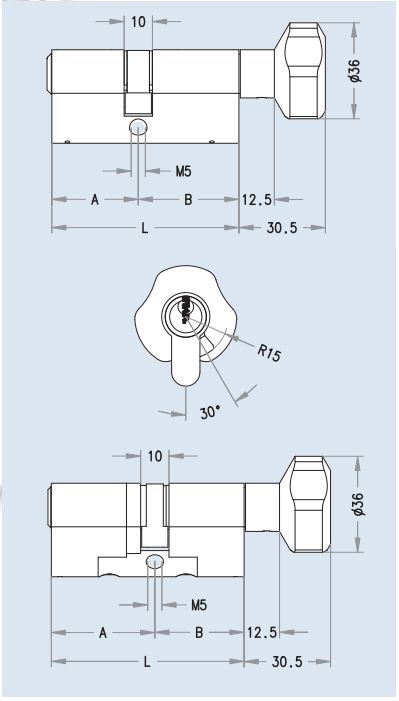

Cylinder lengths

6-pin compact and modular design

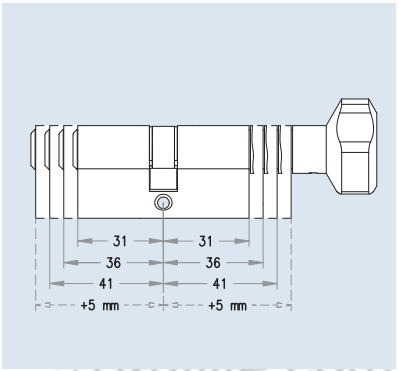

Finishes

Finishes	Abbreviations	Cylinder	AKN, KKN, FKN	RKN, MKN	OKN, OKNA	GKN
Satin brass	MS	●	●	●	●	●
Satin nickel	NI	●	●	●	●	●
Polished nickel	NP	O	O	O	O	O
Satin chrome	CR	O	O	O	O	O
Polished chrome	CP	O	O	O	O	O
Patinated black	PS	O	O	O	O	O
Patinated brown	PB	O	O	O	O	O
Polished brass lacquered	MP	O	O	O	O	O
PVD coated	PVD-MS	O	O	O		O
RAL colour	RAL					O

www.Bravite.com

AKN standard thumbturn

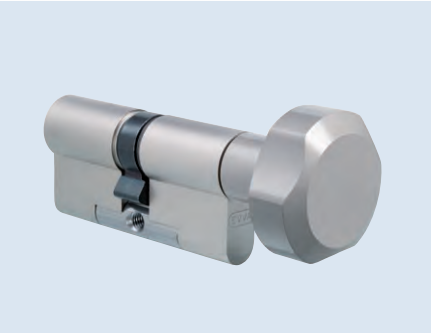

Functional characteristics
- removable thumbturn with three grip recesses

Technical data
- base material: brass
- finishes: satin nickel-plated, satin brushed, polished lacquer

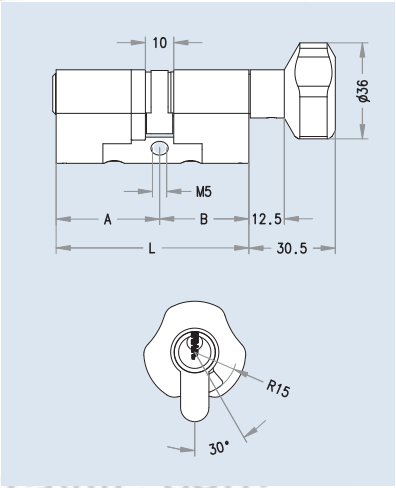

Ordering information
- KZ cylinder length A/B (A=outer side; B=inner side (thumbturn side)) [security and usage options]
- [finish]/AKN

KKN conical thumbturn



Functional characteristics
- removable, cone-shaped thumbturn with grip recesses

Technical data
- base material: brass
- finishes: satin nickel-plated, satin brushed, polished lacquer

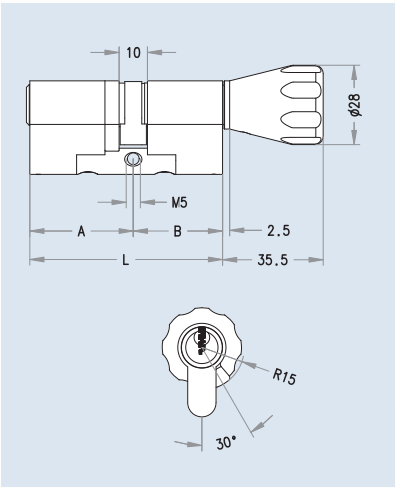

Ordering information
- KZ cylinder length A/B (A=outer side; B=inner side (thumbturn side)) [security and usage options]
- [finish]/KKN

RKN round thumbturn



Functional characteristics
- removable, round thumbturn set off to the rear

Technical data
- base material: brass
- finishes: satin nickel-plated, satin brushed, polished lacquer

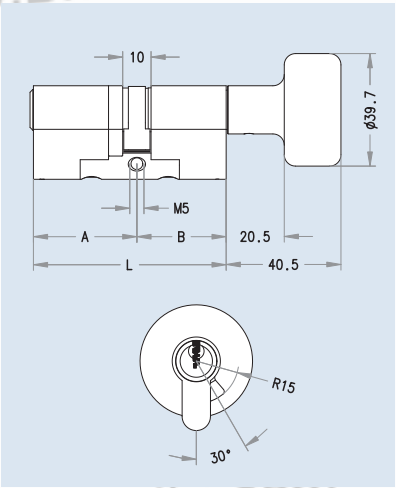

Ordering information
- KZ cylinder length A/B (A=outer side; B=inner side (thumbturn side)) [security and usage options]
- [finish]/RKN

www.Bravite.com

Product catalogue, Release 01/10/2009
Errors and misprints excepted. Subject to technical change without notice.

MKN knurled metal thumbturn

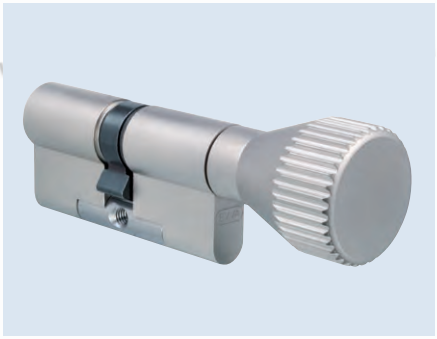

Ordering information
- KZ cylinder length A/B (A=outer side; B=inner side (thumbturn side)) [security and usage options]
- [finish]/MKN

- **Functional characteristics**
  - removable, knurled thumbturn with medium-sized serrations
- **Technical data**
  - base material: brass
  - finishes: satin nickel-plated, satin brushed, polished lacquer

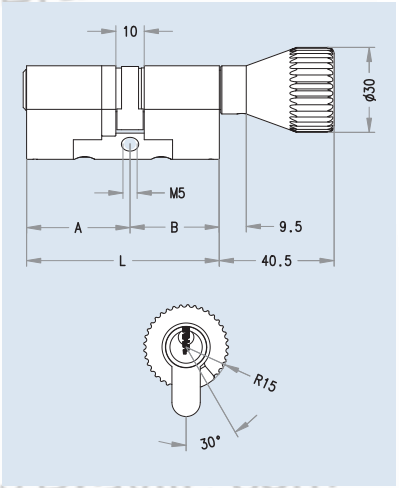

GKN recessed grip thumbturn

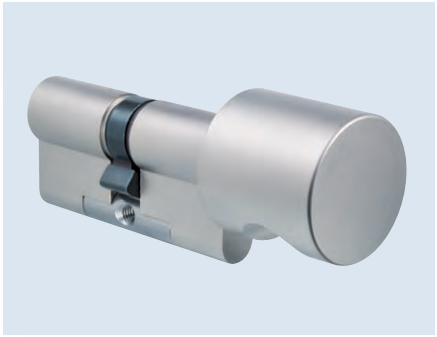

Ordering information
- KZ cylinder length A/B (A=outer side; B=inner side (thumbturn side)) [security and usage options]
- [finish]/GKN

- **Functional characteristics**
  - removable, round thumbturn set off to the rear
- **Technical data**
  - base material: brass
  - finishes: satin nickel-plated, satin brushed, polished lacquer
  - or lacquered in RAL colours: blue RAL5002; dark green RAL6012; yellow RAL1004; green RAL6001; grey RAL7038; red RAL3003; black RAL9005; white RAL 9010; other RAL colours on request

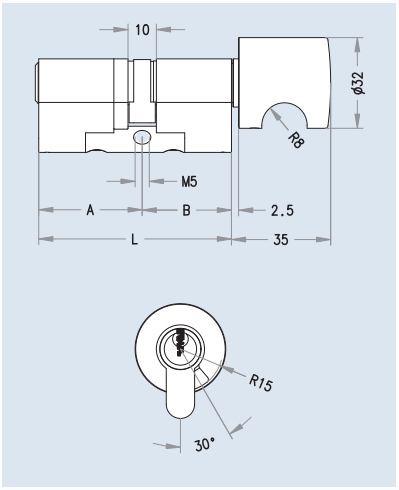

FKN flat thumbturn



Ordering information
- KZ cylinder length A/B (A=outer side; B=inner side (thumbturn side)) [security and usage options]
- [finish]/FKN

- **Functional characteristics**
  - removable, stylishly shaped, flat thumbturn with 2 grip recesses
  - particularly suitable for elderly persons and people with disabilities
- **Technical data**
  - base material: brass
  - finishes: satin nickel-plated, satin brushed, polished lacquer

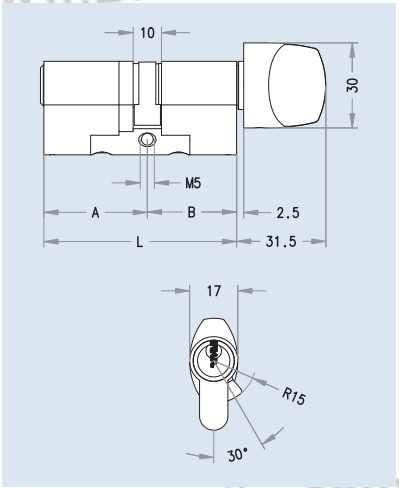

www.Bravite.com

OKN oval thumbturn



Ordering information
- KZ cylinder length A/B (A=outer side; B=inner side (thumbturn side)) [security and usage options]
- [finish]/OKN

Functional characteristics
- removable, horizontal, light metal thumbturn with two grip recesses

Technical data
- base material: aluminium
- finishes: satin nickel-plated, F2 anodised, F3 anodised, polished gold colour

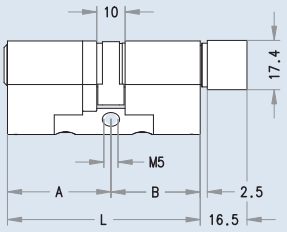

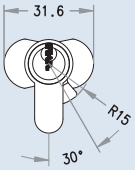

OKNA asymmetric oval thumbturn



Ordering information
- KZ cylinder length A/B (A=outer side; B=inner side (thumbturn side)) [security and usage options]
- [finish]/OKNA

Functional characteristics
- removable, vertical, light metal thumbturn with two grip recesses

Technical data
- base material: aluminium
- finishes: satin nickel-plated, F2 anodised, F3 anodised, polished gold colour

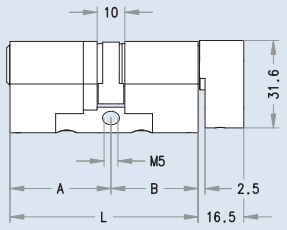

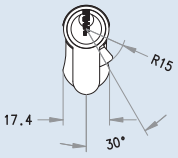

Thumbturn | Options



Ordering information
- KZ cylinder length A/B, CLASS (A=outer side; B=inner side (thumbturn side)
- [finish]/[thumbturn design]
- when thumbturn design is not specified: standard AKN thumbturn

Thumbturn cylinder with classroom function
The thumbturn side (inside area) can only be unlocked with the thumbturn. Locking from the inside (e.g. class rooms) is not possible. In addition the key side always has priority function. Thus the cylinder can also be operated from the outside e.g. when the thumbturn is held from the inside.

Assembly & operation
- easy cylinder installation in applicable cylinder recess
- adjustable for left/right doors
- cylinder fixation by means of a fixing borehole M5

www.Bravite.com

KZ thumbturn cylinder | Options



Thumbturn cylinder with SOS function
The key-operated cylinder side is equipped with a priority function. Even when manipulated (e.g. when the inside thumbturn is prevented from turning) the lock cylinder can be operated from the outside.

Other options
see DZ options

Ordering information

- cylinder length A/B, SOS (A=outer side; B=inner side (thumbturn side)
- [finish]/[thumbturn design]
- when thumbturn design is not specified: standard AKN thumbturn

www.Bravite.com

Options overview

ARS possible only in compact design,
VAR possible only in compact design,
S = Standard
● simple combination possible
ARS, VARIO and SG are only possible in compact design

		BSZ	KZS	SSW	SEW	ARS	VDS	NS	ZR10	ZR18	BIF	STEN	VAR	GEFE	SOS	HOTE	ZVS	PA	USH	FL2	DUP
		external key override	plug pulling protection	dust cover	sea water resistant	protection against breaking off	certified cylinder acc to VdS	wear resistance	cog wheel 10 teeth	cog wheel 18 teeth	double cam Biffar	star cam	construction keying	emergency function	priority function	hotel function	shortened body	partner function	different locking hierarchy	free wheel cam	four-eyes principle
external key override	BSZ	-	-	-	-	-	-	-	-	-	-	-	-	-	-	-	-	-	-	-	-
plug pulling protection	KZS	-	-	-	●	●	S	●	●	●	●	●	●	-	●	-	●	-	-	-	●
dust cover	SSW	-	-	-	●	●	●	●	●	●	●	●	●	-	●	-	-	-	-	-	●
sea water resistant	SEW	-	●	●	-	●	●	●	●	●	●	●	●	-	●	-	●	-	-	-	●
protection against breaking off	ARS	-	●	●	●	-	S	●	-	-	-	-	●	-	●	-	●	-	-	-	●
certified cylinder acc to VdS	VDS	-	S	●	●	S	-	●	●	●	●	●	-	-	-	-	-	-	-	-	-
wear resistance	NS	-	●	●	●	●	●	-	●	●	●	●	●	-	●	-	●	-	-	-	●
cog wheel 10 teeth	ZR10	-	●	●	●	-	●	●	-	-	-	-	●	-	●	-	●	-	-	-	●
cog wheel 18 teeth	ZR18	-	●	●	●	-	●	●	-	-	-	-	●	-	●	-	●	-	-	-	●
double cam Biffar	BIF	-	●	●	●	-	●	●	-	-	-	-	●	-	●	-	●	-	-	-	●
star cam	STEN	-	●	●	●	-	●	●	-	-	-	-	●	-	●	-	●	-	-	-	●
construction keying	VAR	-	●	●	●	●	-	●	●	●	●	●	-	-	●	-	●	-	-	-	-
emergency function	GEFE	-	-	-	-	-	-	-	-	-	-	-	-	-	-	-	-	-	-	-	-
priority function	SOS	-	●	●	●	●	-	●	●	●	●	●	●	-	-	-	●	-	-	-	●
hotel function	HOTE	-	-	-	-	-	-	-	-	-	-	-	-	-	-	-	-	-	-	-	-
shortened body	ZVS	-	●	-	●	●	-	●	●	●	●	●	●	-	●	-	-	-	-	-	●
partner function	PA	-	-	-	-	-	-	-	-	-	-	-	-	-	-	-	-	-	-	-	-
different locking hierarchy	USH	-	-	-	-	-	-	-	-	-	-	-	-	-	-	-	-	-	-	-	-
free wheel cam	FL2	-	-	-	-	-	-	-	-	-	-	-	-	-	-	-	-	-	-	-	-
four-eyes principle	DUP	-	●	●	●	●	-	●	●	●	●	●	-	-	●	-	●	-	-	-	-

HZ half cylinder



5-pin compact design



5-pin modular design

Ordering information

- HZ cylinder length A, [M = modular], [finish], [security and usage options]
- e.g. HZ 32, M, Ni
  cylinder length 32, modular design with nickel finish

Applications and usage

- for one or more turn mortise locks and other diverse locks
- key switch
- switch arming features
- garage doors and roll-up doors fastened at the side

Functional characteristics

- operable with key from one side
- 360 degree cam movement
- 45 degree cam removal position
- 8 setting positions for lock cam (45°, 90°,135°, 180°, 225°, 270°, 315°, 360°)

Technical data

- cylinder housing: base material, brass
- cylinder plug: base material, brass
- all scanning elements coated with Triflon
- cam base position 45 degrees (changeable)
- cam width 9.3 mm

Included in delivery

- half cylinder with fixing screw

Assembly & operation

- easy cylinder installation in a prepared, empty cylinder aperture
- cylinder should be flush with the fitting or rose
- cylinder fixation via a M5 fastener bore hole

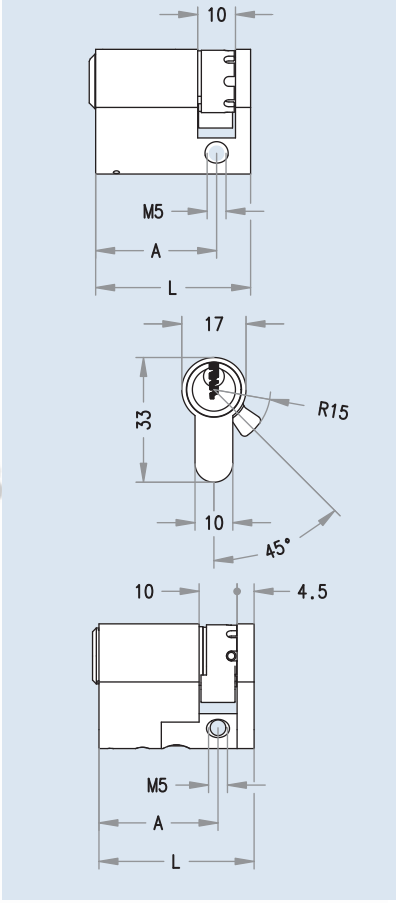

Finishes

Finishes	Abbreviations	Standard	Surcharge
Satin brass	MS	●	
Satin nickel	NI	●	
Polished nickel	NP		O
Satin chrome	CR		O
Polished chrome	CP		O
Patinated black	PS		O
Patinated brown	PB		O
Polished brass lacquered	MP		O
PVD coated	PVD-MS		O

Cylinder lengths

5-pin compact and modular design

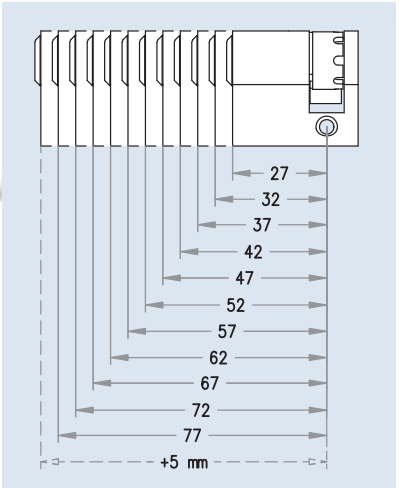

www.Bravite.com

Product catalogue, Release 01/10/2009
Errors and misprints excepted. Subject to technical change without notice.

HZ half cylinder



6-pin compact design



6-pin modular design

Ordering information

- HZ cylinder length A, [M = modular], [finish], [security and usage options]
- e.g. HZ 32, M, Ni
  cylinder length 32, modular design with nickel finish

Applications and usage

- for one or more turn mortise locks and other diverse locks
- key switch
- switch arming features
- garage doors and roll-up doors fastened at the side

Functional characteristics

- operable with key from one side
- 360 degree cam movement
- 45 degree cam removal position
- 8 setting positions for cam (45°, 90°,135°, 180°, 225°, 270°, 315°, 360°)

Technical data

- cylinder housing: base material, brass
- cylinder plug: base material, brass
- all scanning elements coated with Triflon
- cam base position 45 degree (changeable)
- cam width 9.3 mm

Included in delivery

half cylinder with fixing screw

Assembly & operation

- easy cylinder installation in a prepared, empty cylinder aperture
- cylinder should be flush with the fitting or rose
- cylinder fixation via a M5 fastener bore hole

Finishes

Finishes	Abbreviations	Standard	Surcharge
Satin brass	MS	●	
Satin nickel	NI	●	
Polished nickel	NP		O
Satin chrome	CR		O
Polished chrome	CP		O
Patinated black	PS		O
Patinated brown	PB		O
Polished brass lacquered	MP		O
PVD coated	PVD-MS		O

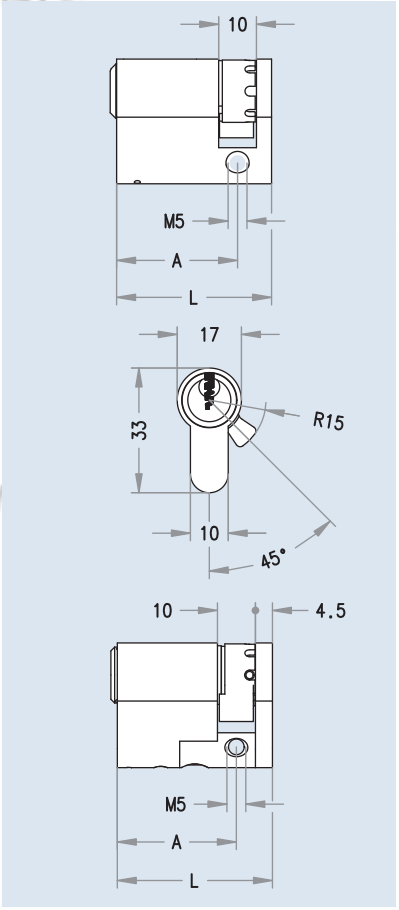

Cylinder lengths

6-pin compact and modular design

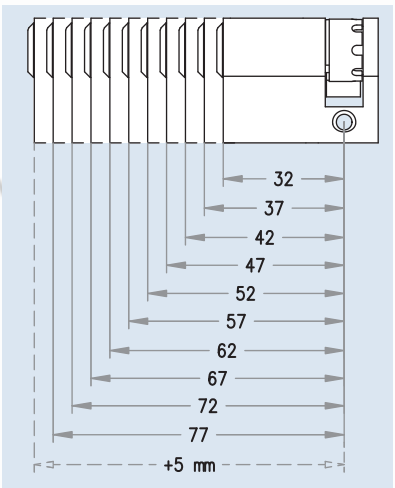

www.Bravite.com

HZ/S half cylinder



5-pin compact design



5-pin modular design

Ordering information

- HZ cylinder length A, [M = modular], [finish], [security and usage options]
- e.g. HZ 32, M, Ni
  cylinder length 32, modular design with nickel finish

Applications and usage

- key switch
- switch arming features
- garage doors, roll-up doors, lifts, escalators where fastening is from behind

Functional characteristics

- operable with key from one side
- 360 degree cam movement
- 30 degree cam removal position
- 8 setting positions for cam (45°, 90°,135°, 180°, 225°, 270°, 315°, 360°)
- can be fastened by 2, M4 threaded holes at the rear side
- can be fastened through 1, M5 threaded hole at the side

Technical data

- cylinder housing: base material, brass
- cylinder plug: base material, nickel-silver
- all scanning elements coated with Triflon
- cam base position, 45 degrees (changeable)
- cam width 9.3 mm

Included in delivery

- half cylinder with fixing screw

Assembly & operation

- easy cylinder installation in a prepared, empty cylinder aperture
- cylinder should be flush with the fitting or rose
- cylinder fixation via a M5 fastener bore hole (at the side)
- cylinder fixation via 2 rear-side, M4 bore holes

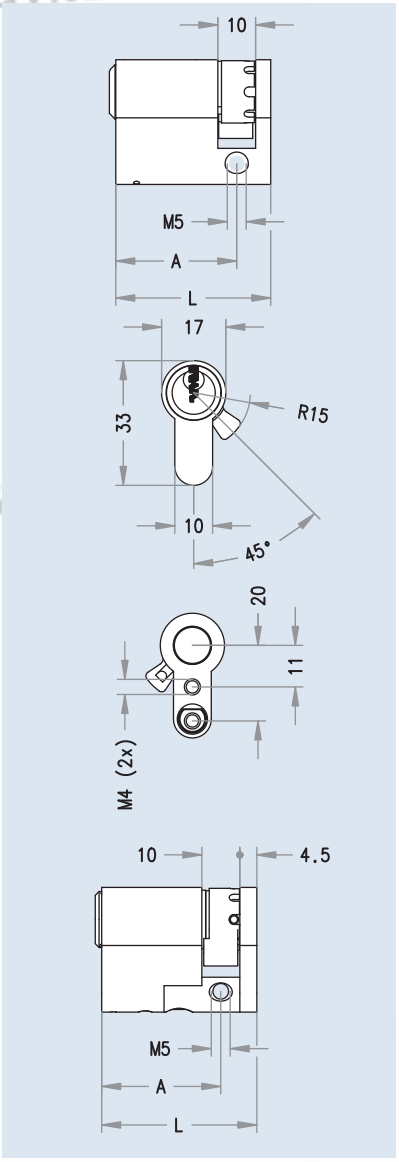

Cylinder lengths

5-pin compact and modular design

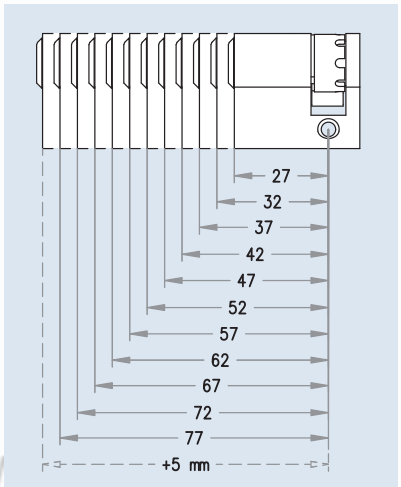

Finishes

Finishes	Abbreviations	Standard	Surcharge
Satin brass	MS	●	
Satin nickel	NI	●	
Polished nickel	NP		O
Satin chrome	CR		O
Polished chrome	CP		O
Patinated black	PS		O
Patinated brown	PB		O
Polished brass lacquered	MP		O
PVD coated	PVD-MS		O

www.Bravite.com

Product catalogue, Release 01/10/2009
Errors and misprints excepted. Subject to technical change without notice.

HZ/S half cylinder



6-pin compact design



6-pin modular design

Ordering information

- HZ cylinder length A, [M = modular], [finish], [security and usage options]
- e.g. HZ 32, M, Ni
  cylinder length 32, modular design with nickel finish

Applications and usage

- key switch
- switch arming features
- garage doors, roll-up doors, lifts, escalators where fastening is from behind

Functional characteristics

- operable with key from one side
- 360 degree cam movement
- 30 degree cam removal position
- 8 setting positions for cam (45°, 90°,135°, 180°, 225°, 270°, 315°, 360°)
- can be fastened by 2, M4 threaded holes at the rear side
- can be fastened through 1, M5 threaded hole at the side

Technical data

- cylinder housing: base material, brass
- cylinder plug: base material, nickel-silver
- all scanning elements coated with Triflon
- cam base position, 45 degrees (changeable)
- cam width 9.3 mm

Included in delivery

- half cylinder with fixing screw

Assembly & operation

- easy cylinder installation in a prepared, empty cylinder aperture
- cylinder should be flush with the fitting or rose
- cylinder fixation via a M5 fastener bore hole (at the side)
- cylinder fixation via 2 rear-side, M4 bore holes

Finishes

Finishes	Abbreviations	Standard	Surcharge
Satin brass	MS	●	
Satin nickel	NI	●	
Polished nickel	NP		O
Satin chrome	CR		O
Polished chrome	CP		O
Patinated black	PS		O
Patinated brown	PB		O
Polished brass lacquered	MP		O
PVD coated	PVD-MS		O

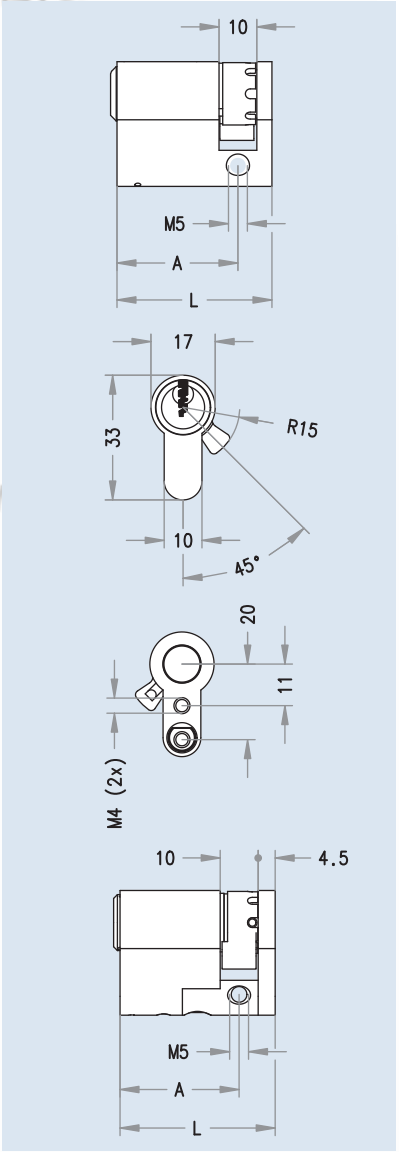

Cylinder lengths

6-pin compact and modular design

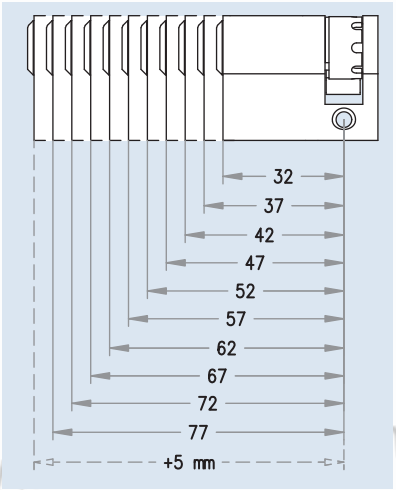

www.Bravite.com

HPM padlock



Ordering information

- HPM (standard: hardened steel shackle)

Applications and usage

- simple doors secured with a hasp
- roll-up blinds
- gate systems
- fastening chains
- security fences

Functional characteristics

- to lock simple mechanisms
- padlock with rounded security shackle
- operated from the bottom side
- 90 degree locking movement
- key removal only possible in closed condition

Security features

- hard metal drill protection in plug and housing
- positively driven locking of the security shackle

Technical data

- padlock: base material brass, satin nickel-plated
- shackle made of hardened, chemically nickel-plated steel or non-corroding steel
- shackle diameter, 8 mm
- standard shackle: clearance height, 30 mm
- clearance width, 25 mm

Assembly & operation

- for use with any hasp having an eyelet diameter > 8 mm

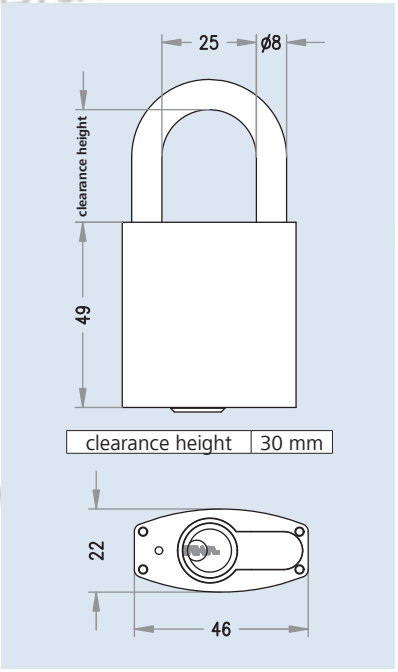

www.Bravite.com

HPM BS padlock



Ordering information

- HPM BS (standard: hardened steel shackle)

Applications and usage

- simple doors secured with a hasp
- roll-up blinds
- gate systems
- fastening chains
- security fences

Functional characteristics

- to lock simple mechanisms
- padlock with rounded security shackle
- operated from the bottom side
- 90 degree locking movement
- key removal only possible in closed condition

Security features

- hard metal drill protection in plug and housing
- positively driven locking of the security shackle
- hardened steel shackle protection

Technical data

- padlock, base material brass, satin nickel-plated
- shackle made of hardened, chemically nickel-plated steel
- shackle diameter, 8 mm
- standard shackle: clearance height, 15 mm
  clearance width, 12 mm

Assembly & operation

- for use with any hasp having an eyelet diameter > 8 mm

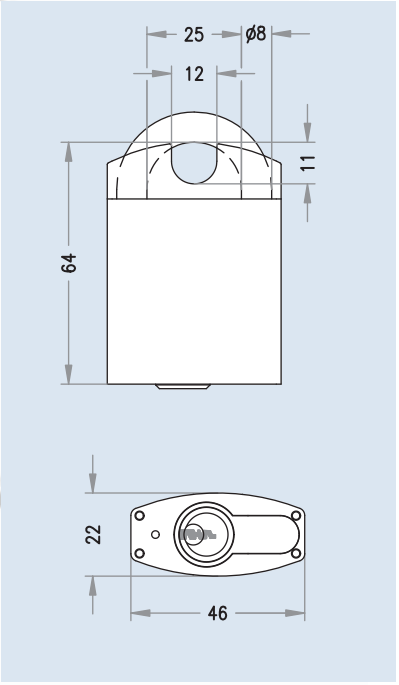

www.Bravite.com

HPM SSW padlock with dust cover



Ordering information

- HPM SSW (standard hardened steel shackle),
- on request, made of stainless steel

Applications and usage

- simple doors secured with a hasp
- roll-up blinds
- gate systems
- fastening chains
- security fences

Functional characteristics

- operated from the bottom side
- 90 degree locking movement
- key removal only possible in closed condition
- with dust cover

Security features

- hard metal drill protection in plug and housing
- positively driven locking of the security shackle

Technical data

- padlock, base material brass, satin nickel-plated
- shackle made of hardened, chemically nickel-plated steel or stainless steel
- shackle diameter, 8 mm
- standard shackle: clearance height, 30 mm
  clearance width, 25 mm
- dust cover

Assembly & operation

- for use with any hasp having an eyelet diameter > 8 mm

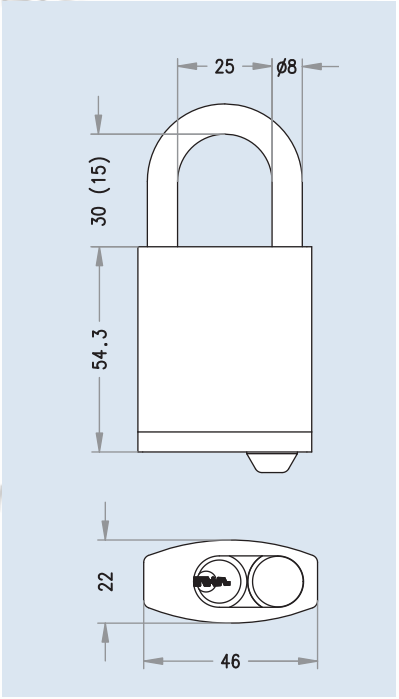

www.Bravite.com

Long shackle HPM padlock



Ordering information

- HPM (standard hardened steel shackle)

Applications and usage

- roll-up blinds
- fastening chains
- security fences

Functional characteristics

- to lock simple mechanisms
- padlock with rounded security shackle
- operated from the bottom side
- 90 degree locking movement
- key removal only possible in closed condition

Security features

- hard metal drill protection in plug and housing
- positively driven locking of the security shackle

Technical data

- padlock, base material brass, satin nickel-plated
- shackle made of hardened, chemically nickel-plated steel or stainless steel
- shackle diameter, 8 mm

Assembly & operation

- for use with any hasp having an eyelet diameter > 8 mm

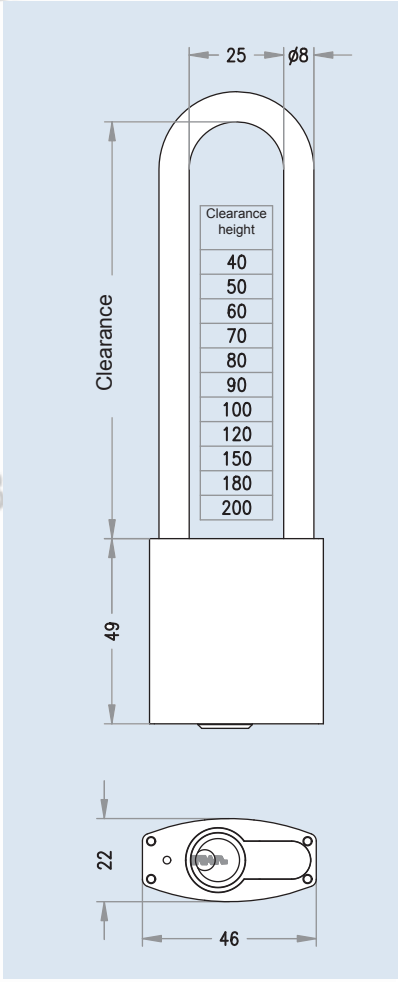

www.Bravite.com

H24 padlock



Ordering information

- H24, NI

Applications and usage

- simple doors secured with a hasp
- roll-up blinds
- gate systems
- fastening chains
- security fences

Functional characteristics

- to lock simple mechanisms
- padlock with rounded security shackle
- 90 degree locking movement
- key removal only possible in closed condition

Security features

- positively locked through locking movement

Technical data

- padlock, base material brass, satin nickel-plated
- shackle made of hardened, chemically nickel-plated steel or stainless steel
- shackle diameter 8 mm
- standard shackle: clearance height 30 mm
  clearance width 24 mm

Assembly & operation

- for use with any hasp having an eyelet diameter > 8 mm

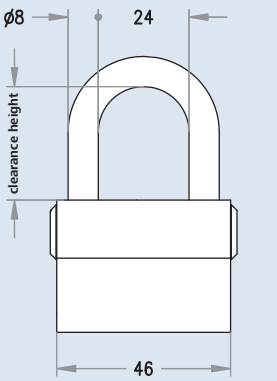

clearance height	30 mm

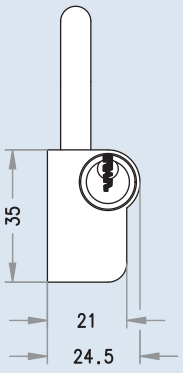

www.Bravite.com

H24 S padlock



Ordering information

- H24S, NI

Applications and usage

- simple doors secured with a hasp
- roll-up blinds
- gate systems
- for applications with wide eyelet spacing

Functional characteristics

- to lock simple mechanisms
- padlock with rounded security shackle
- 90 degree locking movement
- key removal only possible in closed condition
- security shackle removable in open condition

Security features

- positively locked through locking movement

Technical data

- padlock, base material brass, satin nickel-plated
- shackle made of hardened, chemically nickel-plated steel or stainless steel
- shackle diameter 8 mm
- standard shackle: clearance height, 60 mm
  clearance width 50 mm

Assembly & operation

- for use with any hasp having an eyelet diameter > 8 mm

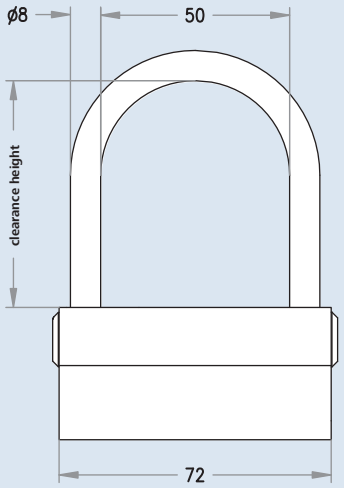

clearance height	60 mm

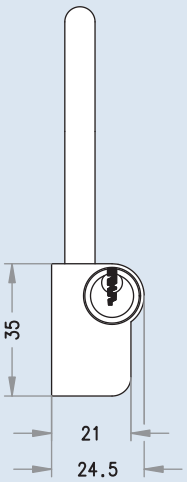

www.Bravite.com

H30 padlock



Ordering information

- H30, NI

Applications and usage

- doors secured with a heavy hasp
- roll-up blinds
- gate systems
- fastening chains
- security fences

Functional characteristics

- to lock simple mechanisms
- padlock with rounded security shackle
- 90 degree locking movement
- key removal only possible in closed condition

Security features

- positively locked through locking movement
- shackle diameter 10 mm

Technical data

- padlock, base material brass, satin nickel-plated
- shackle made of hardened, chemically nickel-plated steel or stainless steel
- shackle diameter, 10 mm
- standard shackle: clearance height, 40 mm
  clearance width 30 mm

Assembly & operation

- for use with any hasp having an eyelet diameter > 10 mm

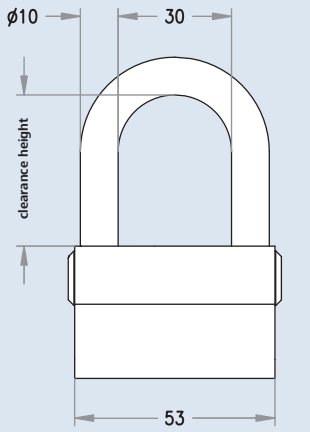

clearance height	40 mm

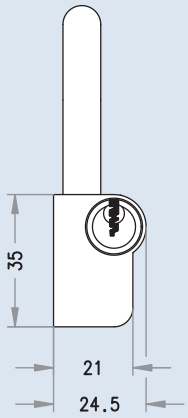

www.Bravite.com

www.Bravite.com

MB19 cam lock



Ordering information
MB19 [finish], [cam], if the standard cam is desired, no further information is necessary

Applications and usage
- wooden and sheet metal boxes
- mailboxes with small cylinder aperture
- showcase locks

Functional characteristics
- locking by cam
- 90 degree locking movement
- key can only be removed in closed condition
- flat side finishes prevent rotation
- rear-side fixation of the cylinder with a hex nut (WS22)
- standard cam, 33.5 mm

Technical data
- cylinder front face Ø, 22 mm
- M19 threads for WS22 fastening nut
- base material: brass
- steel cam, blue galvanised

Included in delivery
- locking cylinder with 5072 standard cam, 33.5 mm
- M19 fastening nut

Assembly & operation
- for material thickness up to 14 mm
- cylinder aperture Ø 19 flattened to 16 mm
- cam secured by 2 rear-side screws

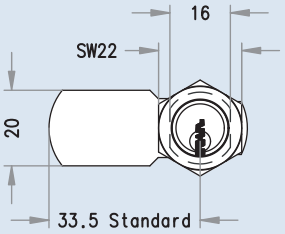

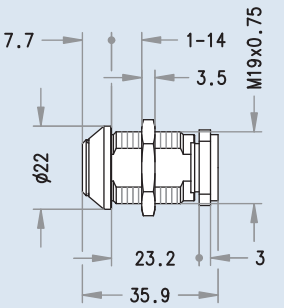

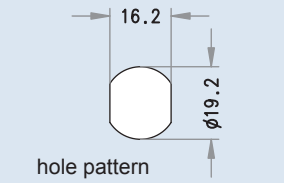

www.Bravite.com

MB19SZ switch cylinder



Ordering information
MB19SZ [finish]

Applications and usage
- as switch cylinder with integrated switch element
- for direct activation of circuits

Functional characteristics
- 90 degree locking movement
- on/off switch function
- key removal only possible in one position

Technical data
- cylinder front face Ø, 22 mm
- M19 threads for WS22 fastening nut
- base material: brass
- F4 T7 switch element

Included in delivery
- cylinder with switch elements and connecting cable
- M19 fastening nut

Assembly & operation
- for material thickness up to 14 mm
- cylinder aperture Ø 19 flattened to 16 mm
- electrical connection must be performed by a professional

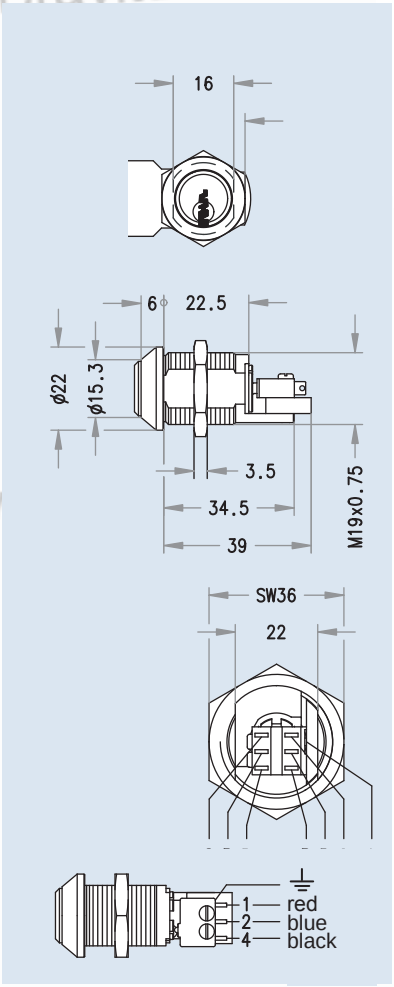

www.Bravite.com

MB23 cam lock



Ordering information
MB23 [finish], [cam], if the standard cam is desired, no further information is necessary

Applications and usage
- wooden and sheet metal boxes
- mailboxes with medium cylinder aperture
- showcase locks
- emergency key boxes
- key boxes
- wardrobe boxes/lockers
- cabinets

Functional characteristics
- looking by cam
- 90 degree locking movement
- key can only be removed in closed condition
- flat side finishes prevent rotation
- rear-side fixation of the cylinder with a hex nut (WS27)
- standard cam, 33.5 mm
- S function (MB23S), key can be removed in either of 2 positions

Security features
- hard metal elements to prevent drilling into plug
- flat finishes on both cylinder sides prevent rotation

Technical data
- cylinder front face Ø, 24.8 mm
- M22 threads for WS27 fastening nut
- base material: brass
- steel cam, blue galvanised

Included in delivery
- locking cylinder with 5072 standard cam, 33.5 mm
- M22 fastening nut

Assembly & operation
- for material thickness up to 17 mm
- cylinder aperture Ø 23 flattened to 17.7 mm
- cam secured by 2 rear-side screws

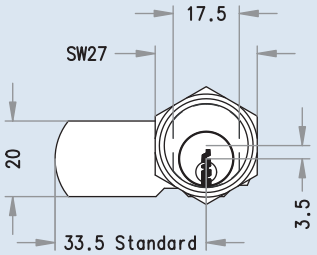

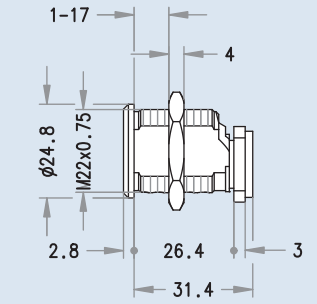

6-pin is longer by 5 mm

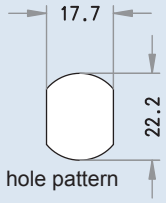

www.Bravite.com

MB23GT cam lock for glass door



Ordering information
MB23 [finish], [cam], [fastening plate], if the standard cam is desired, no further information is necessary

Applications and usage
- glass showcase locks
- glass door cabinets

Functional characteristics
- locking by cam
- 90 degree locking movement
- key can only be removed in closed condition
- flat side finishes prevent rotation
- rear-side fixation of the cylinder with a hex nut (WS27)
- standard cam, 33.5 mm
- bevelled-edge fastening plate

Security features
- hard metal elements to prevent drilling into plug
- flat finishes on both cylinder sides prevent rotation

Technical data
- cylinder front face Ø, 24.8 mm
- M22 threads for WS27 fastening nut
- base material: brass
- steel cam, blue galvanised
- brushed aluminium fastening plate

Included in delivery
- locking cylinder with 5072 standard cam, 33.5 mm
- M22 fastening nut
- fastening plate
- plastic plate

Assembly & operation
- for material thickness up to 17 mm
- cylinder aperture Ø 23 flattened to 17.7 mm
- cam secured by 2 rear-side screws
- plastic plate to protect glass

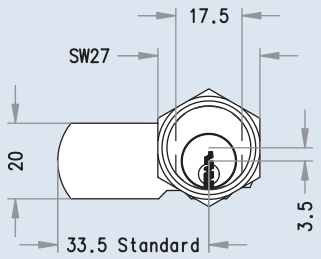

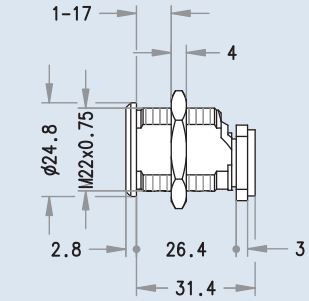

6-pin is longer by 5 mm

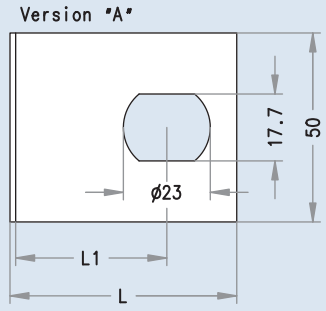

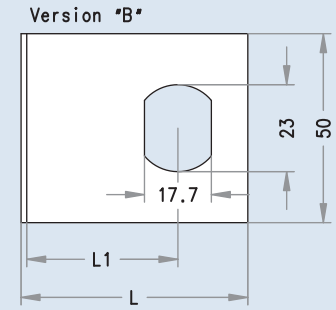

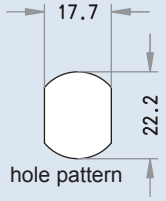

www.Bravite.com

MB23SZ switch cylinder



Ordering information
MB23SZ [finish]

Applications and usage
- as switch cylinder with integrated switch element
- for direct activation of circuits

Included in delivery
- locking cylinder with switch elements and connection cabling
- WS27 fastening nut

Functional characteristics
- 90 degree locking movement
- on/off switch function
- key removal only possible in one position

Technical data
- cylinder front face Ø, 24.8 mm
- M23 threads for WS27 fastening nut
- base material: brass
- F4 T7 switch element
- with earth connection

Assembly & operation
- for material thickness up to 14 mm
- cylinder aperture, Ø 23 one side
- flattened to 17.7 mm
- electrical connection must be performed by a professional

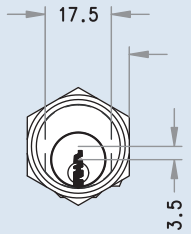

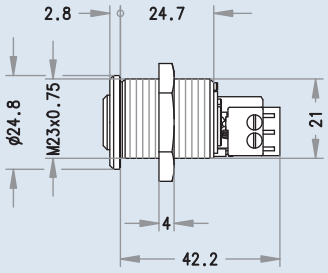

6-pin is longer by 5 mm

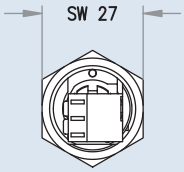

www.Bravite.com

MB30 cam lock



Ordering information

MB30 [finish], [cam], if the standard cam is desired, no further information is necessary

Applications and usage

- wooden and sheet metal boxes
- showcase locks
- emergency key boxes with compulsory locking
- key depositories
- key boxes
- wardrobe boxes/lockers
- cabinets
- fuse and junction boxes

Functional characteristics

- locking by cam
- 90 degree locking movement
- key can only be removed in closed condition
- flat side finishes prevent rotation
- rear-side fixation of the cylinder with a hex nut (WS36), 33.5 mm standard cam
- S function (MB30S), key can be removed in either of 2 positions

Technical data

- cylinder front face Ø, 30 mm
- M30 threads for WS36 fastening nut
- base material: brass
- steel cam, blue galvanised

Included in delivery

- locking cylinder with 5072 standard cam, 33.5 mm
- M30 fastening nut

Assembly & operation

- for material thicknesses from 1 to 20 mm
- cylinder aperture Ø 30 flattened to 22 mm
- cam secured by 2 rear-side screws

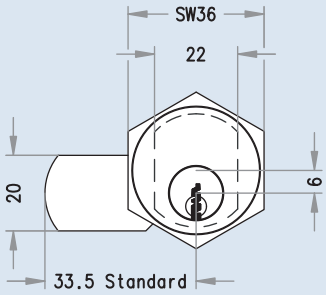

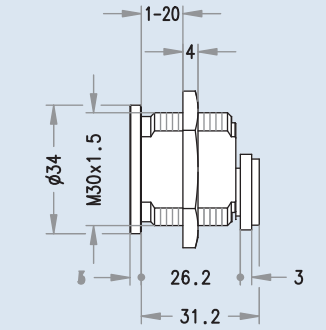

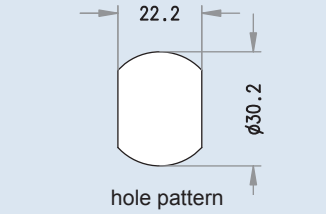

www.Bravite.com

ZB27 cam lock



Ordering information
ZB27 [finish], [cam], if the standard cam is desired, no further information is necessary

Applications and usage
- wooden and sheet metal boxes
- mailboxes with large cylinder aperture
- mailbox systems with large cylinder aperture
- electric junction boxes
- fuse boxes

Functional characteristics
- locking by cam
- 90 degree locking movement
- key can only be removed in closed condition
- cylinder fixation by way of rear-side clamp plate
- 5072 standard cam, 33.5 mm

Technical data
- cylinder front face Ø, 34 mm without rose, 50 mm with rose
- base material: brass
- steel cam, blue galvanised

Included in delivery
- locking cylinder with 5072 standard cam, 33.5 mm, without rose

Assembly & operation
- for material thicknesses from 1 to 8.5 mm (without rose)
- cam secured by 2 rear-side screws

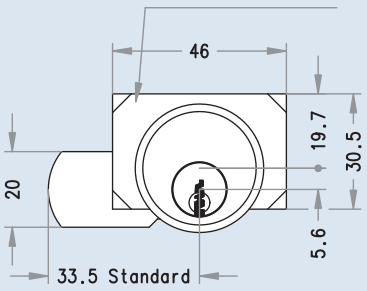

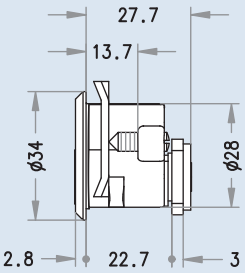

6-pin is longer by 5 mm

www.Bravite.com

Product catalogue, Release 01/10/2009
Errors and misprints excepted. Subject to technical change without notice.

ZB27K cam lock



Ordering information

ZB27K [finish], [cam], if the standard cam is desired, no further information is necessary

Applications and usage

- wooden and sheet metal boxes
- electric junction boxes in outdoor areas
- fuse boxes in outdoor areas

Functional characteristics

- locking by cam
- 90 degree locking movement
- key can only be removed in closed condition
- cylinder fixation by way of rear-side clamp plate
- 5072 standard cam, 33.5 mm
- with dust cover

Technical data

- cylinder front face Ø, 34 mm without rose, 50 mm with rose
- base material: brass
- steel cam, blue galvanised

Included in delivery

- locking cylinder with 33.5 mm standard cam, dust cover, without rose

Assembly & operation

- for material thicknesses from 1 to 8.5 mm (without rose)
- cam secured by 2 rear-side screws

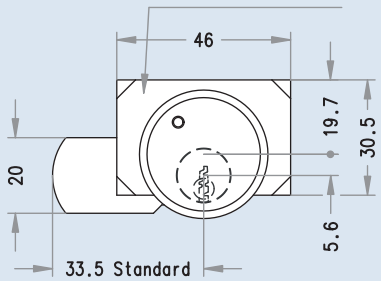

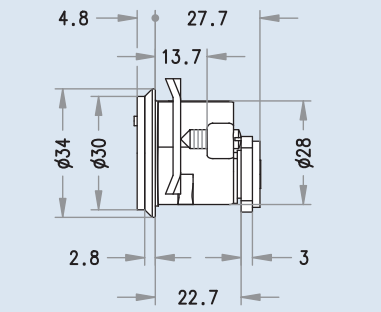

6-pin is longer by 5 mm

www.Bravite.com

HMB Euro profile cam lock



Ordering information
HMB, right/left specification necessary
[finish], [cam], if the standard cam is desired, no further information is necessary

Applications and usage
- wooden cabinets
- showcase locks

Functional characteristics
- locking by cam
- 90 degree locking movement
- key can only be removed in closed condition
- cylinder fixation by way of rear-side fastening plate with end-stop
- 5072 standard cam, 37.5 mm, heavy duty strength

Security features
- hard metal elements to prevent drilling into plug

Technical data
- base material: brass
- heavy duty cam
- steel cam and fastening plate, blue galvanised

Included in delivery
- 5072 standard cam, 37.5 mm, heavy duty strength
- with fastening plate

Assembly & operation
- for material thickness up to 28 mm
- Euro profile cylinder aperture
- cam secured by 2 rear-side screws
- 4-fold screw fixation of the cylinder

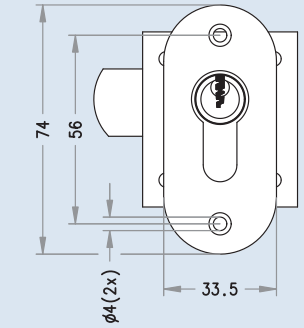

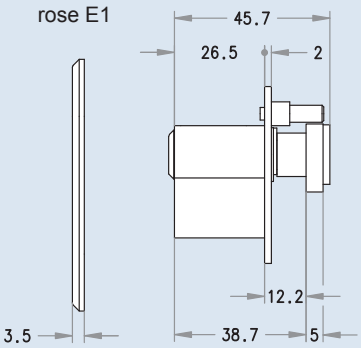

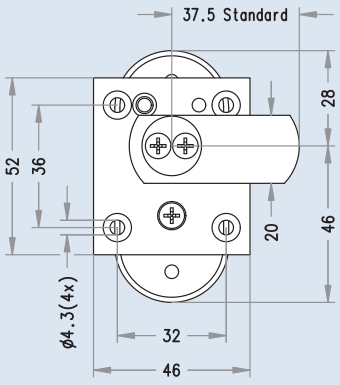

www.Bravite.com

MRT25 / MRL25 furniture cylinders



Ordering information
MRT25/31, [finish], [lock case type]
MRT25/36, [finish], [lock case type]
MRL25/31, [finish]
MRL25/36, [finish]

Applications and usage

- with Universal 4000 screw-on bolt lock for single locking
- for cupboard doors
- for cabinet doors
- with Universal 4540 espagnolette lock for multiple locking
- for cupboard doors with large clearance
- for cabinet doors with large clearance

Functional characteristics

- 360 degree locking movement
- rear-side fastening screws for attachment to Universal 4000 screw-on bolt lock (configured for door design)
- ZVS Universal 4000 screw-on central lock
- Universal 4540 espagnolette lock

Technical data

- cylinder front face Ø, 25 mm without rose
- standard 31 mm cylinder length
- base material: brass

Included in delivery

- MRT25 furniture round cylinder with rose, configured for Universal 4000 lock cases (door design), Universal 4540

Assembly & operation

- universal clamp fixation to lock cases
- easily retrofitted to lock cases

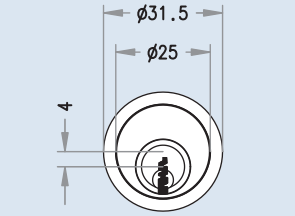

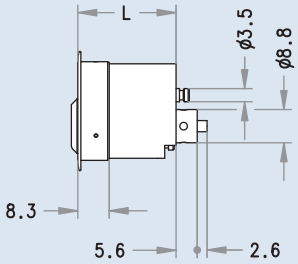

L	26	31	36	41

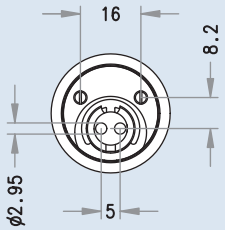

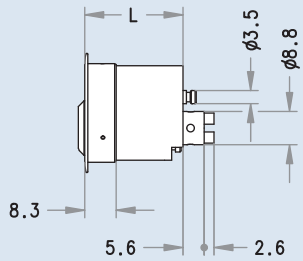

L	26	31	36	41

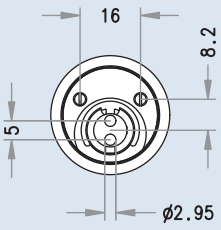

www.Bravite.com

DRZ push-in cylinder



Ordering information
DRZ, [finish]

Applications and usage
- to lock sliding doors

Functional characteristics
- 12 mm bolt stroke
- locking without key
- locking release with key
- cylinder fixation by way of integrated mounting plate

Technical data
- cylinder front face Ø, 22 mm without rose
- cylinder length, 28.5 mm
- base material: brass

Included in delivery
- push-in cylinder with rose

Assembly & operation
- rear-side fixation, integrated mounting plate

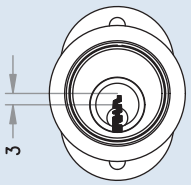

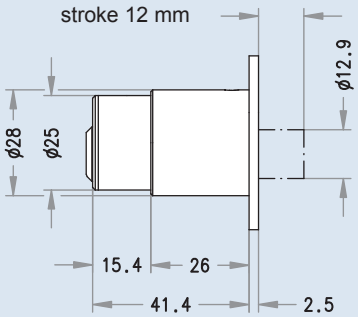

6-pin is longer by 4 mm

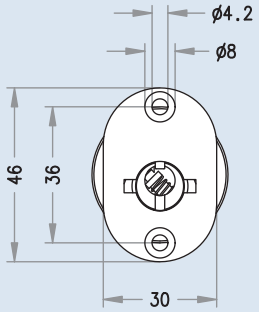

rose

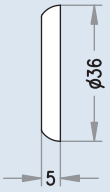

www.Bravite.com

Product catalogue, Release 01/10/2009
Errors and misprints excepted. Subject to technical change without notice.

Universal 4000 furniture screw-on lock



Ordering information
Universal 4000

Applications and usage
furniture screw-on lock for
- furniture doors
- cabinet doors
- shutters

Functional characteristics
- preset backset dimension for 25, 30 and 35 mm doors
- preset backset dimension for 20, 25 and 30 mm shutters
- usable on the left/right of doors and shutters

Included in delivery
- Universal 4000 lock case, without fastening material, without locking plate

Assembly & operation
- universal clamp fixation with side screws on the lock case
- easily retrofitted to lock cases, even when lock cases are already installed

Security features
- solid lock case design
- 2-rotation bolt throw (5 mm and 10 mm)

Technical data
- small installed dimensions, 52 x 54 mm
- 3-fold screw fixation to door or shutter
- adjustable backset dimension
- lock case and bolt made of nickel-plated iron

MRT

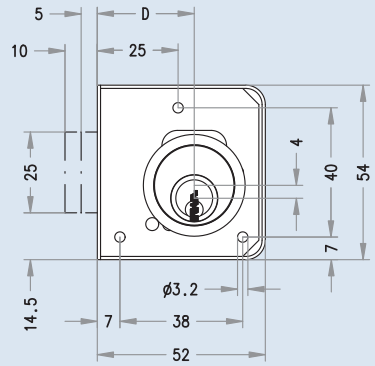

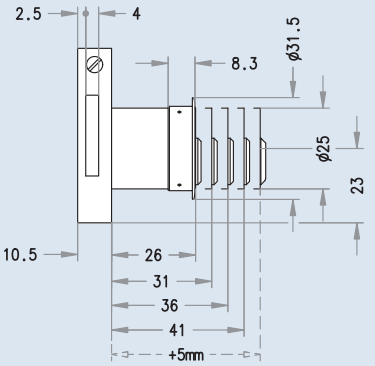

left illustration

MRL

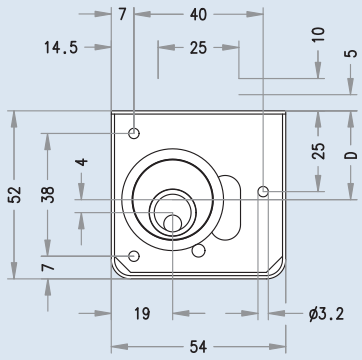

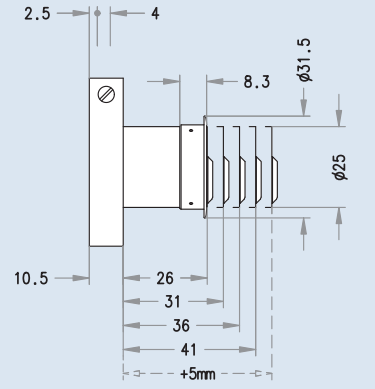

www.Bravite.com

Universal 4540 espagnolette lock for furniture



Applications and usage

espagnolette lock for furniture like
- tall furniture doors and
- tall cabinet doors

which, due to their structure, require more than just locking

Functional characteristics
- 40 mm backset dimension
- configured for 8 mm, full-length espagnolette lock
- single rotation

Security features
- solid lock case design
- single rotation 12 mm bolt throw

Technical data
- small installed dimensions, 61 x 65 mm
- 4-fold screw fixation
- lock case and bolt made of nickel-plated iron
- configured for 8 mm rotary bars
- flattened to 7 mm

Included in delivery
- Universal 4540 lock case
- Accessories:
- 2 hook bolts
- 1 angle strike plate
- 2 joint bolts
- rod guide

Assembly & operation
- universal clamp fixation with a side screw to the lock case
- easily retrofitted to lock case, even when lock cases are already installed

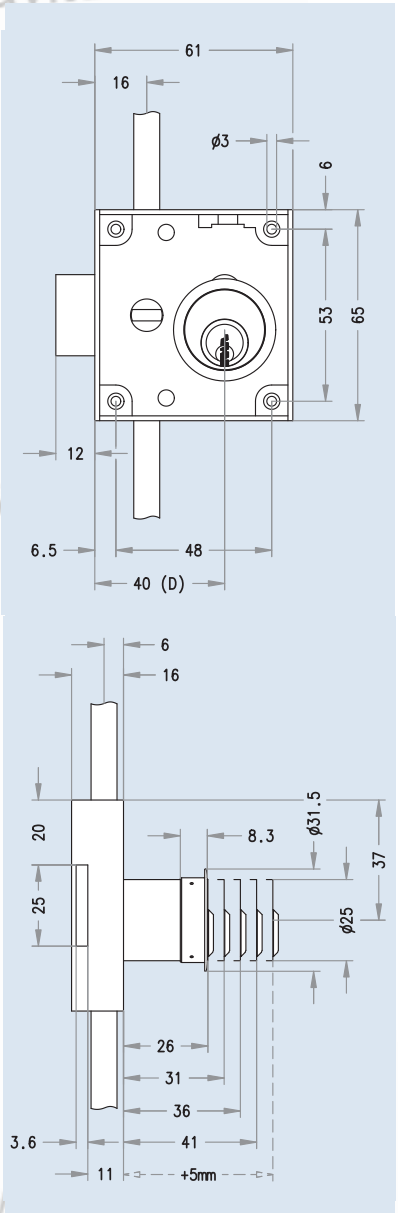

Ordering information

Universal 4540 with MRT/MRL 25

www.Bravite.com

Product catalogue, Release 01/10/2009
Errors and misprints excepted. Subject to technical change without notice.

Universal 4525 espagnolette lock for furniture



Ordering information
Universal 4525 (left/right specification necessary)

Applications and usage

espagnolette lock for furniture like

- lightweight furniture doors and
- lightweight cabinet doors which, due to their structure, require more than just locking and which have already been predrilled for a 25 mm backset dimension. Otherwise we recommend the Universal 4540 espagnolette lock!

Functional characteristics

- 25 mm backset dimension
- configured for 7 mm, full-length espagnolette lock
- single rotation locking function

Security features

- lightweight lock case design
- single rotation 9 mm bolt throw

Technical data

- small installed dimensions, 46 x 83 mm
- 4-fold screw fixation
- lock case and bolt made of nickel-plated iron
- configured for 7 mm full-length rotary bar flattened to 6 mm

Included in delivery

- Universal 4525 lock case
- Accessories:
- 2 hook bolts
- 1 angle strike plate
- 2 joint bolts
- rod guide

Assembly & operation

- universal clamp fixation with a side screw to the lock case

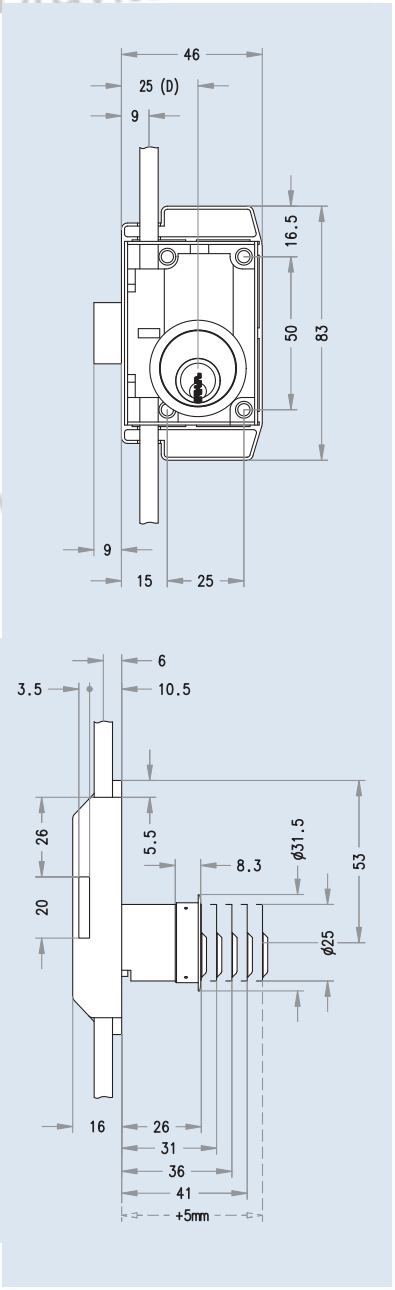

This is a discontinued product available only as long as stocks last!

www.Bravite.com

MAR cabinet lock



Ordering information
MAR left/right and for shutter [backset dimension]

Applications and usage
cabinet lock for simple locking of
- shutters
- cupboard doors
- cabinets

Functional characteristics
- single rotation
- Designs: right/left and for shutters
- 10 mm bolt throw

Security features
- solid lock case design
- single rotation 10 mm bolt throw

Technical data
- lock case of bronzed iron

Included in delivery
- lock case without accessories, without fastening material

Assembly & operation
- simple installation with 4-fold screw fastening

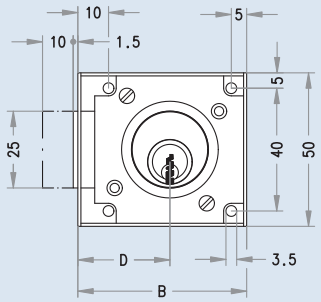

D	30	35	40	50	60
B	55	60	65	75	85

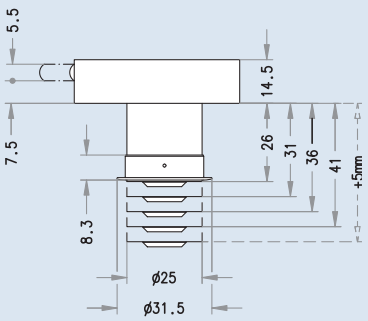

MR25

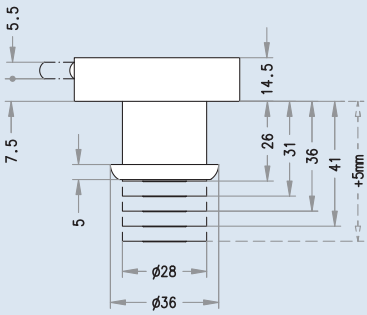

MR28

www.Bravite.com

Product catalogue, Release 01/10/2009
Errors and misprints excepted. Subject to technical change without notice.

MER cabinet lock



Ordering information

- MER left/right and for shutter [backset dimension]

Applications and usage

- cabinet lock for simple locking of
- shutters
- cupboard doors
- cabinets

Functional characteristics

- for flush-mount in cabinet door/shutter
- single rotation
- Designs: right/left and for shutters
- 11 mm bolt throw

Security features

- solid lock case design
- single rotation 11 mm bolt throw

Technical data

- lock case of bronzed iron

Included in delivery

- lock case without accessories, without fastening material

Assembly & operation

- for installation into pre-milled mortise

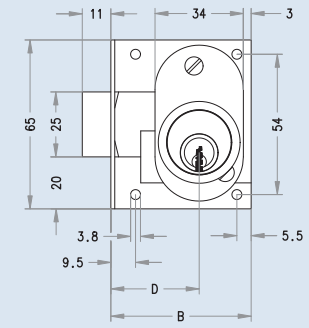

D	29	54	59	49	59
B	49	54	58	69	79

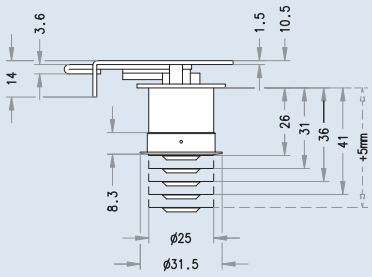

MR25

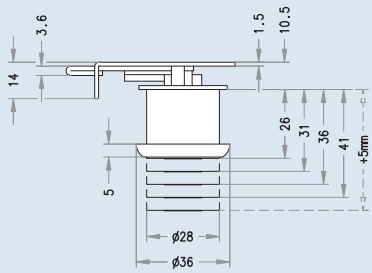

MR28

www.Bravite.com

ERK roll-up cabinet lock

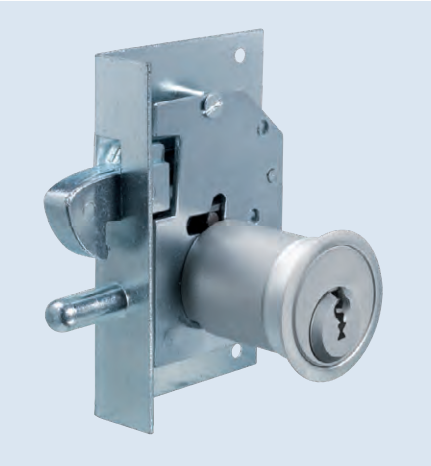

Ordering information
ERK left/right and for shutters

- **Applications and usage**
  access roll-up cabinet for simple locking of
  - roll-up drawers
  - roll-up cabinets
- **Included in delivery**
  - lock case with strike plate, without accessories, without fastening material
- **Functional characteristics**
  - for flush-mount in roll-up doors
  - with snap latch
- **Security features**
  - solid lock case design
  - 7 mm guide bolts
- **Technical data**
  - lock case of galvanised iron
- **Assembly & operation**
  - for installation into pre-milled mortise for wood thicknesses up to 32 mm

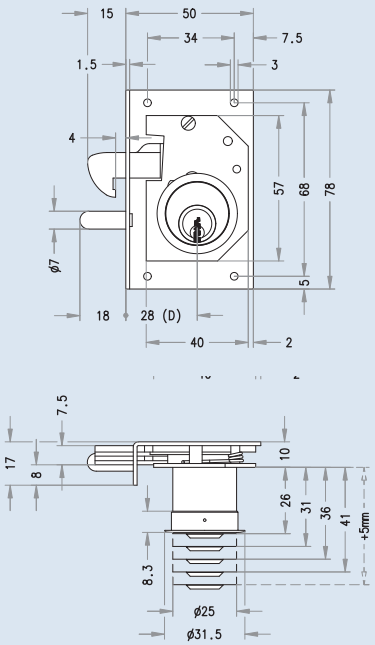

MR25

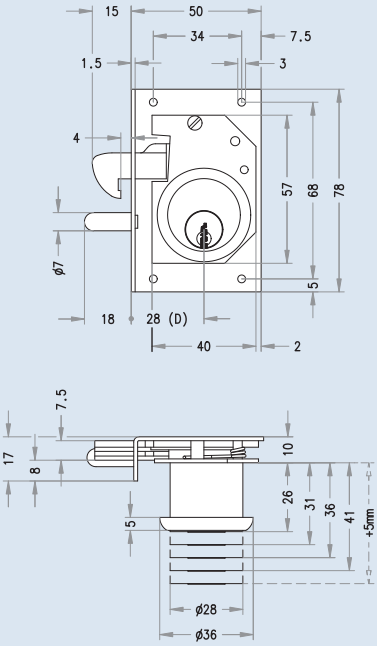

MR28

www.Bravite.com

Product catalogue, Release 01/10/2009
Errors and misprints excepted. Subject to technical change without notice.

SES sliding door lock for cabinet



Ordering information

- SES

Applications and usage

- for simple locking of sliding doors

Included in delivery

- lock case without strike plate, without accessories, without fastening material

Functional characteristics

- for sliding doors

Security features

- lightweight lock case design
- sturdy hook latch

Technical data

- lock case of galvanised iron

Assembly & operation

- for installation into pre-milled mortise
- for wood thicknesses up to 32 mm

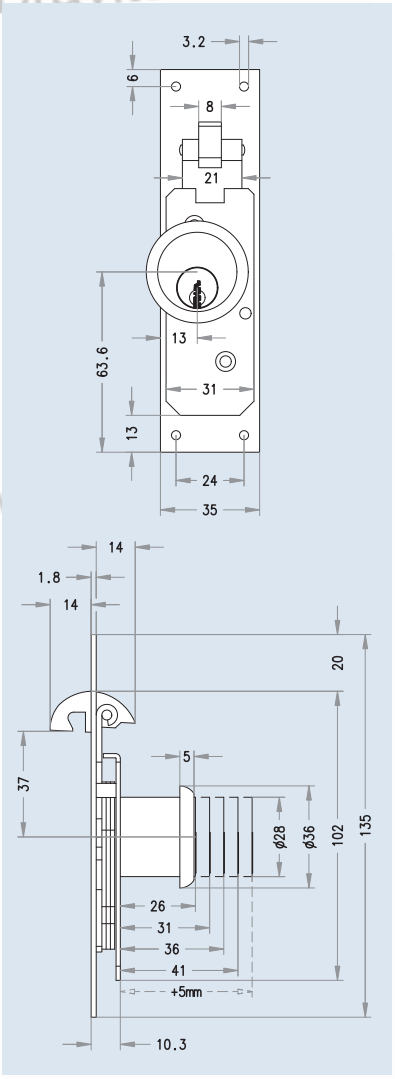

www.Bravite.com

MRH22 cam lock

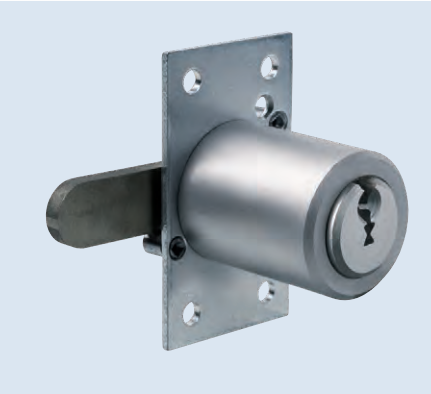

Ordering information
MRH22 [S] [cylinder length], [finish],
[mounting plate: rectangular (E), round (R)]

Applications and usage
- wooden furniture doors and drawers

Functional characteristics
- locking by cam
- 100 degree cam movement
- key is removable in closed condition
- cylinder fixation by way of rear-side mounting plate
- standard cam, 31.5 mm

Technical data
- cylinder front face Ø, 22 mm without rose
- base material: brass
- brass cam and steel mounting plate, blue galvanised

Included in delivery
- cam with 31.5 mm standard cam, mounting plate, without rose

Assembly & operation
- for material thicknesses 25 mm to 65 mm
- rear-side fixation by way of rectangular mounting plate (standard) or
- on request, with a round mounting plate
- cylinder can be used right/left
- design S: key can be removed in 2 positions

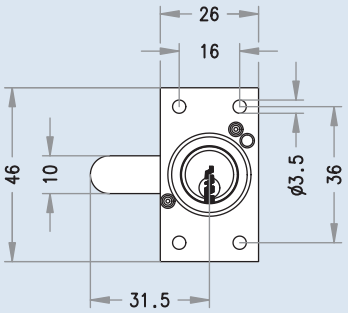

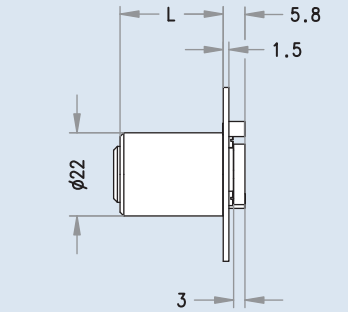

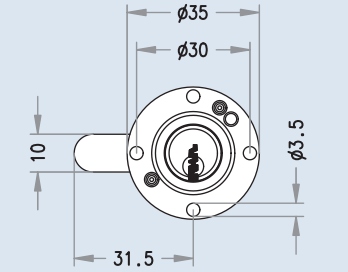

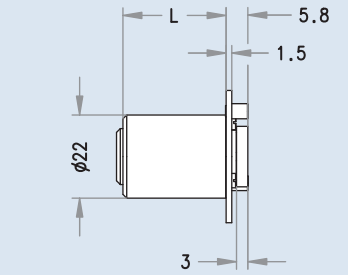

www.Bravite.com

SRZ22 cam lock

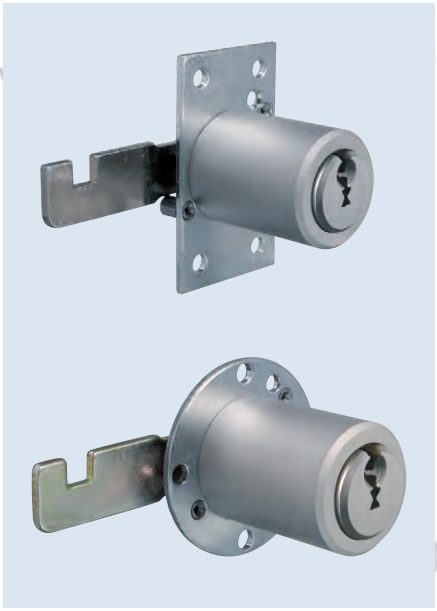

Ordering information
SRZ22 [cylinder length], [finish], [mounting plate: rectangular (E), round (R)]

Applications and usage
- for sliding doors in wooden or metal furniture

Functional characteristics
- locking by cam (pivot bolt)
- 90 degree cam movement
- 360 degree locking movement
- key is removable in open and closed condition
- cylinder fixation by way of rear-side mounting plate
- standard cam, 40 mm

Included in delivery
- cam lock with 40 mm standard cam, mounting plate, without rose

Assembly & operation
- for material thicknesses 25 mm to 65 mm
- rear-side fixation by way of rectangular mounting plate (standard) or
- on request, with a round mounting plate
- cylinder can be used right/left

Technical data
- cylinder front face Ø, 22 mm without rose
- base material: brass
- steel cam and mounting plate, blue galvanised

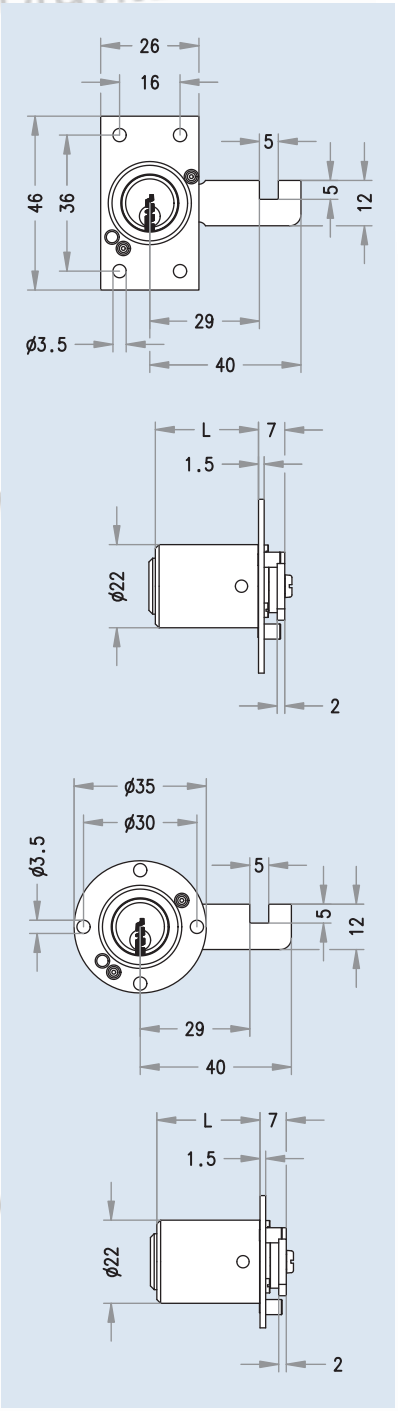

www.Bravite.com

DPM80 coin-operated lock



Ordering information
coin-operated lock [left/right] for [coins € 1/ € 2/tokens]

Functional characteristics

- the key can be removed after coin is inserted and the container is locked
- the coin is returned automatically when the container is unlocked with the key
- the coin can be taken from the inside

Security features

- side coin slot protects against attack in closed condition
- coin deflection inside the lock for verification

Technical data

- material: weatherproof plastic
- bolt of galvanised iron
- coin return recess integrated into lock

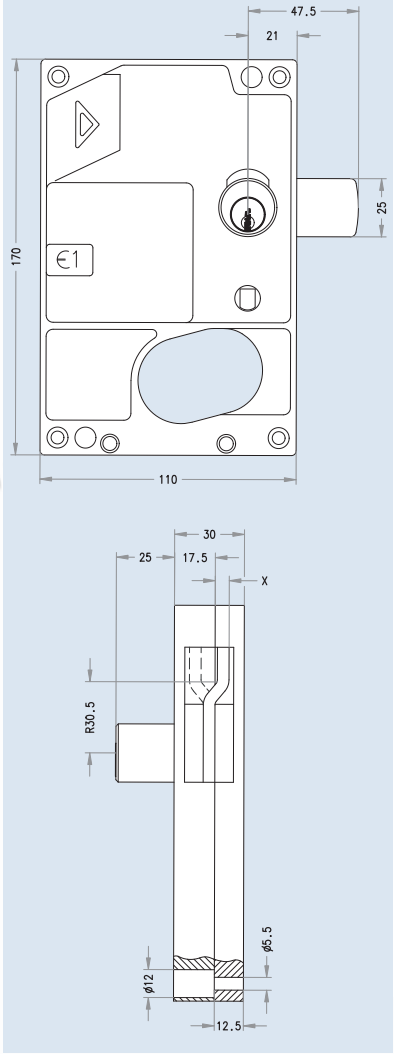

www.Bravite.com

AZ rim cylinder



Ordering information
AZ [finish]

Applications and usage
- prepared for EVVA series K900 and K9000 security rim locks

Functional characteristics
- 360 degree locking movement
- tail bar can be shortened at 5 mm spaced nicks

Security features
- hard metal drill protection in plug and housing
- steel balls serve as drilling protection for the cylinder fastening screws
- vertical key insertion for optimal scan of locking elements

Technical data
- cylinder housing: base material, brass
- cylinder plug: base material, brass
- all scanning elements coated with Triflon
- tail bar for door thickness up to 50 mm
- cylinder Ø 34 mm
- rose Ø 50 mm

Included in delivery
- round cylinder with rose and
- 2 fastening screws, M5 x 40

Assembly & operation
- easy cylinder installation in prepared round hole
- cylinder fixation via two M5 fastener bore holes
- cylinder screws with pointed tips for simple installation

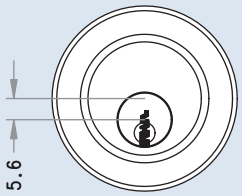

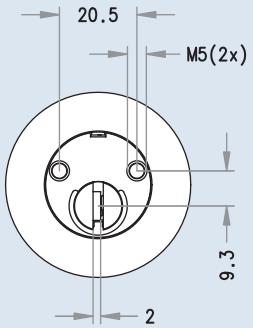

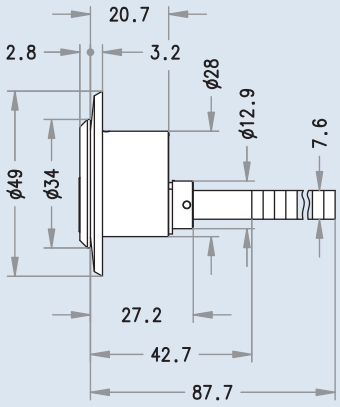

5-pin

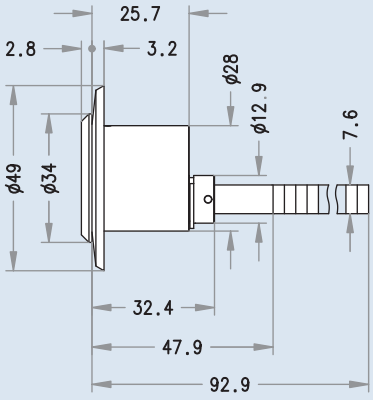

6-pin

www.Bravite.com

AZG rim cylinder



Ordering information
AZG [finish]

Applications and usage
for third-party products like rim locks, ...

Included in delivery
- round cylinder with 2 fastening screws, M5 x 40

Functional characteristics
- 360 degree locking movement
- tail bar can be shortened at 5 mm spaced nicks

Security features
- hard metal drill protection in plug and housing
- steel balls serve as drilling protection for the cylinder fastening screws
- vertical key insertion for optimal scan of locking elements

Technical data
- cylinder housing: base material, brass
- cylinder plug: base material, brass
- all scanning elements coated with Triflon
- tail bar for door thickness up to 50 mm
- cylinder Ø 34 mm
- rose Ø 50 mm

Assembly & operation
- easy cylinder installation in prepared round hole
- cylinder fixation via two M5 fastener bore holes
- cylinder screws with pointed tips for simple installation

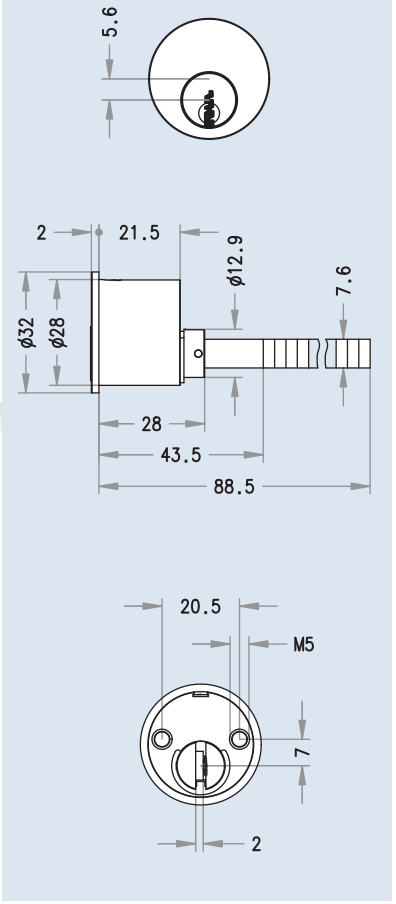

www.Bravite.com

AZI rim cylinder



Ordering information
AZ [finish]

Applications and usage
- for rim locks of various manufacturers

Included in delivery
- round cylinder with rose and
- 2 fastening screws, M5 x 40

Functional characteristics
- 360 degree locking movement
- tail bar can be shortened at 5 mm spaced nicks

Security features
- hard metal drill protection in plug and housing
- steel balls serve as drilling protection for the cylinder fastening screws
- vertical key insertion for optimal scan of locking elements

Technical data
- cylinder housing: base material, brass
- cylinder plug: base material, brass
- all scanning elements coated with Triflon
- tail bar for door thickness up to 50 mm
- cylinder Ø 34 mm
- rose Ø 50 mm

Assembly & operation
- easy cylinder installation in prepared round hole
- cylinder fixation via two M5 or M6 fastener bore holes
- cylinder screws with pointed tips for simple installation

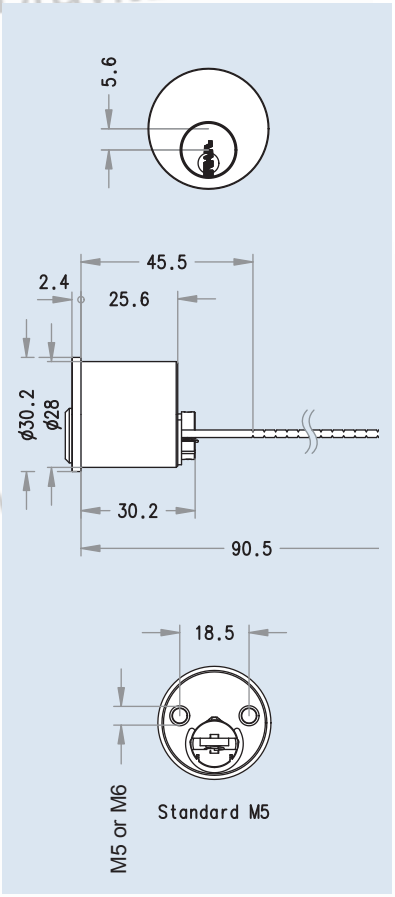

www.Bravite.com

AZ4050 rim cylinder



Ordering information
AZ [finish]

Applications and usage
- prepared for rim locks .131, .132, .133, .136

Included in delivery
- round cylinder with rose and 2 fastening screws, M5 x 40

Functional characteristics
- 360 degree locking movement
- tail bar can be shortened at 5 mm spaced nicks

Security features
- hard metal drill protection in plug and housing
- steel balls serve as drilling protection for the cylinder fastening screws
- vertical key insertion for optimal scan of locking elements

Technical data
- cylinder housing: base material, brass
- cylinder plug: base material, brass
- all scanning elements coated with Triflon
- tail bar for door thickness up to 50 mm
- cylinder Ø 34 mm
- rose Ø 50 mm

Assembly & operation
- easy cylinder installation in prepared round hole
- cylinder fixation via two M5 fastener bore holes
- cylinder screws with pointed tips for simple installation

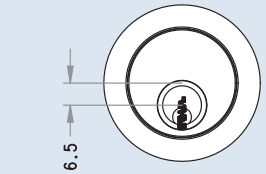

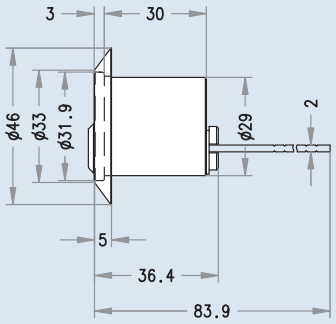

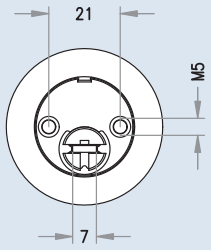

www.Bravite.com

AZ 4063 rim cylinder



Ordering information
AZ [finish design]

Applications and usage
- prepared for rim locks .133, .136

Included in delivery
- round cylinder with rose and 2 fastening screws, M5 x 40

Functional characteristics
- 360 degree locking movement
- tail bar can be shortened at 5 mm spaced nicks

Security features
- hard metal drill protection in plug and housing
- steel balls serve as drilling protection for the cylinder fastening screws
- vertical key insertion for optimal scan of locking elements

Technical data
- cylinder housing: base material, brass
- cylinder plug: base material, brass
- all scanning elements coated with Triflon
- tail bar for door thickness up to 50 mm
- cylinder Ø 34 mm
- rose Ø 50 mm

Assembly & operation
- easy cylinder installation in prepared round hole
- cylinder fixation via two M5 fastener bore holes
- cylinder screws with pointed tips for simple installation

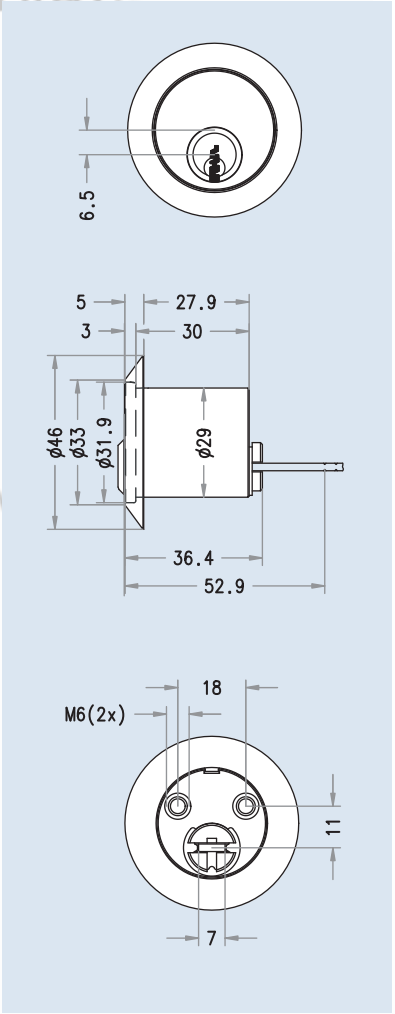

www.Bravite.com

PDZ portal double cylinder



Ordering information
PDZ cylinder length A/B, [finish], [security and usage options]

Applications and usage
- portals with direct bolting
- garden doors without mortise lock but direct bolting

Functional characteristics
- lockable from both sides with key
- Ø 15 mm locking bolt
- 21.5 mm bolt protrusion
- 15 mm stroke

Technical data
- cylinder housing: base material, brass
- cylinder plug: base material, brass
- all scanning elements coated with Triflon
- integrated locking bolt with
- 15 mm stroke

Included in delivery
- locking cylinder without fixing screw, with locking bolt

Assembly & operation
- cylinder installation in a prepared, empty cylinder aperture; configured for portal cylinder
- 3 possible M5 fastening variations

Security features
- hard metal drill protection in plug and housing
- vertical key insertion for optimal scan of locking elements

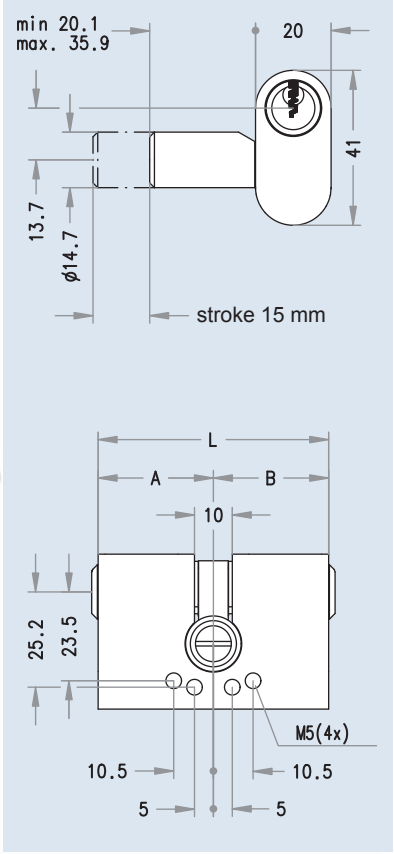

www.Bravite.com

Product catalogue, Release 01/10/2009
Errors and misprints excepted. Subject to technical change without notice.

PHZ portal half cylinder



Ordering information
PHZ cylinder length A, [finish], [security and usage options]

Applications and usage
- portals with direct bolting
- garden doors without mortise lock but direct bolting
- show window shields

Functional characteristics
- operable with key from one side
- Ø 15 mm locking bolt
- 21.5 mm bolt protrusion
- 15 mm stroke

Security features
- hard metal drill protection in plug and housing
- vertical key insertion for optimal scan of locking elements

Included in delivery
- locking cylinder without fixing screw, with locking bolt

Technical data
- cylinder housing: base material, brass
- cylinder plug: base material, brass
- all scanning elements coated with Triflon
- integrated locking bolt with
- 15 mm stroke

Assembly & operation
- cylinder installation in a prepared, empty cylinder aperture for portal cylinder
- 3 possible M5 fastening variations

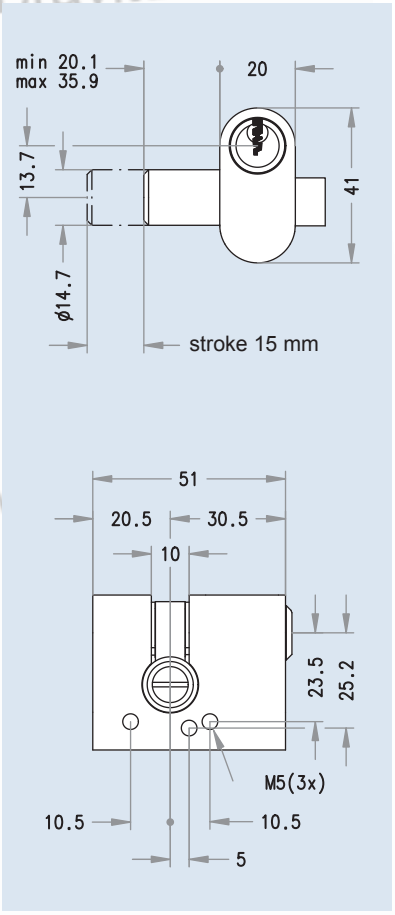

www.Bravite.com

EMZY MZT35i electronic motorised cylinder

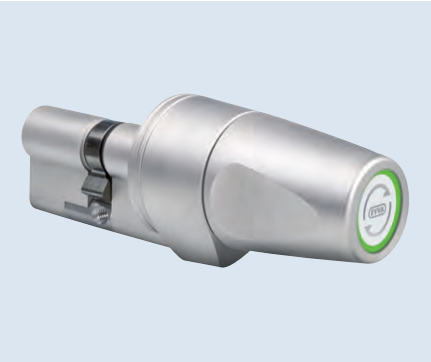

Ordering information

- KZ cylinder length A/B, MZT35i (A=outer side; B=inner side (thumbturn side)) [security and usage options], [finish]

Accessories

- "MCU MI"- micro controller for flush mounting, without power adapter
- "MCU NT"- power adapter for standard supply of the "MCU MI"-micro controller
- EVKA cylinder connection cable, 10 m
- ERK1 door contact incl. 1.5 m connection cable (white or brown)
- ERK4 door contact for metal doors with built-in tub, including 1.5 m connection cable
- EKAO open cable transition, length 30 cm incl. two end pieces (white, brown or chrome)
- ERKO bolt contact incl. 2 m connection cable with switch-over contact
- ABDMK 35 thumbturn cover

Applications and usage

- for mortise locks per DIN or ÖNORM
- for mortise locks per harmonised European norms
- small backset dimension for the motor-driven thumbturn on the thumbturn side, particularly well suited for metal frame doors
- and for mortise locks with profile cylinder apertures
- minimal 35 mm backset dimension for standard door installation per DIN 18101
- motor-driven thumbturn with integrated button for simple operation
- mechanical emergency release from the locking side
- electronic control via external input units (code keypad, wall reader, ...)

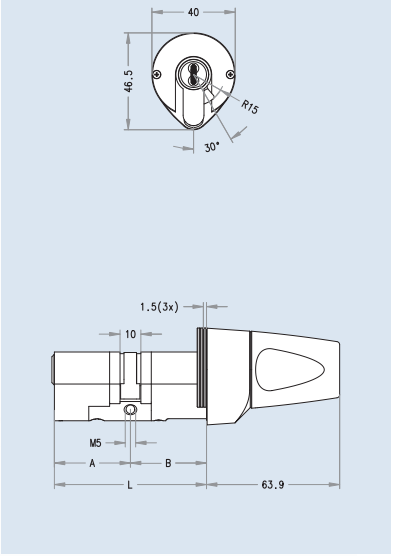

Included in delivery

- electronic motorised cylinder
- 3 spacer discs, 1.5 mm ea.
- fixing screw

Functional characteristics

- electronically operated, cabled motor-driven cylinder
- to lock/unlock locks
- simple night-and-day mode switch
- interactive learn-mode for lock function (1 and 2 rotation locks)

Security features

- shape-matched spacer discs allow a seamless transition from the thumbturn to the fitting

Technical data

- cylinder housing: base material, brass
- cylinder plug: base material, nickel-silver
- all scanning elements coated with Triflon
- cam base position, 30 degrees
- cam width, 9.3 mm
- modular cylinder structure
- motor thumbturn torque, about 1 Nm

Assembly & operation

- easy cylinder installation in a prepared, empty cylinder aperture
- cylinder overhang may not exceed 3 mm for security-relevant doors
- cylinder fixation via a M5 fastener bore hole

www.Bravite.com

Product catalogue, Release 01/10/2009
Errors and misprints excepted. Subject to technical change without notice.

Cam variants

Applications and usage

- for cam locks MB19, MB23, MB30, ZB27, ZB27K, MB20GT, MB23G, MB23GT, MB30MB, MB30

Attention: cam variants do not apply to MRH22 and SRZ22

5088

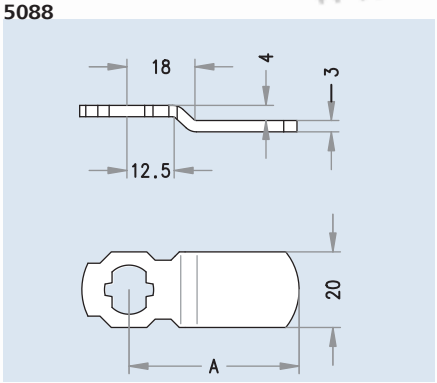

A	33,5	45	65

5092

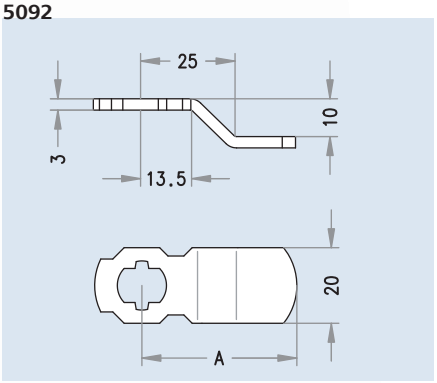

A	41	48,5	52,5

5072

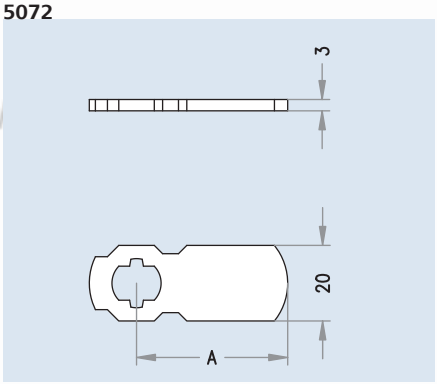

A	19	28	34	37	40	45	50
	55	60	65	70	75	80	

5089

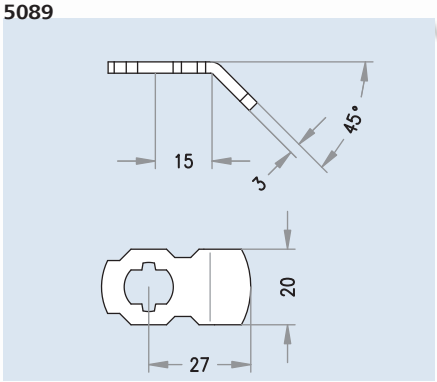

5094

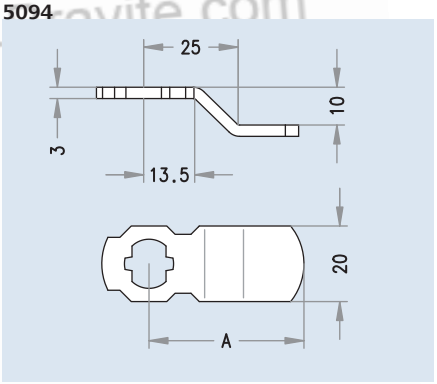

A	33,5	41	59

5073

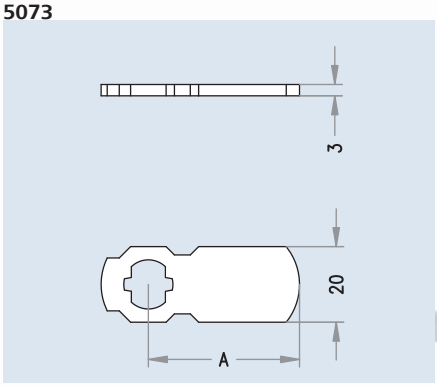

A	27	34	36	40	45	50
	55	60	65	70	75	80

5090

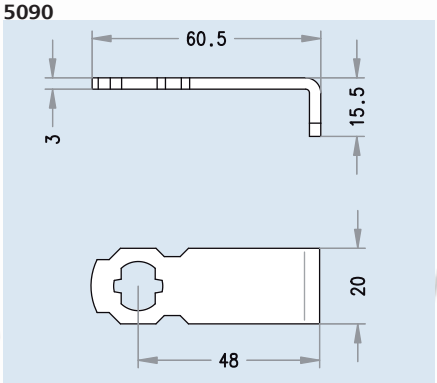

5095

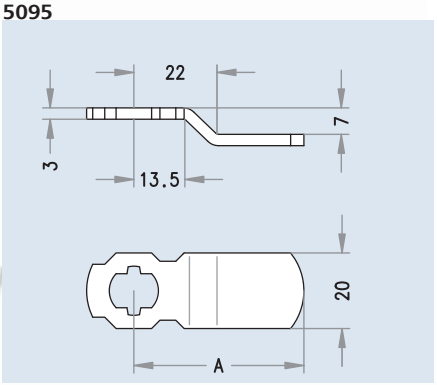

A	45	50

5087

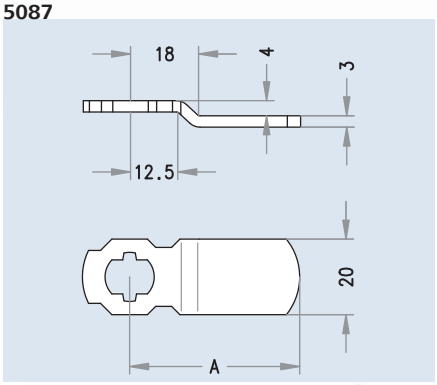

A	33,5	40	45	65

5091

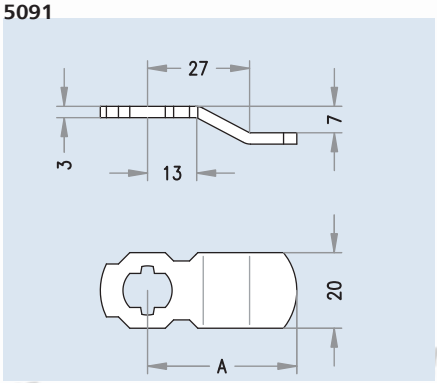

A	39,5	59	65,5

5096

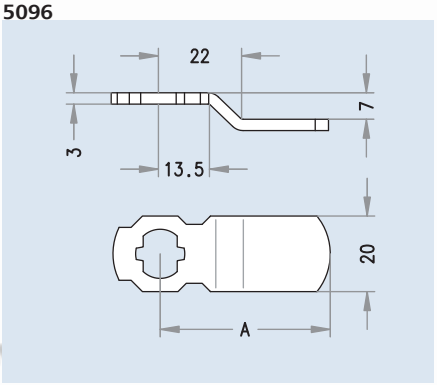

A	33,5	45

www.Bravite.com

Cam variants

5097

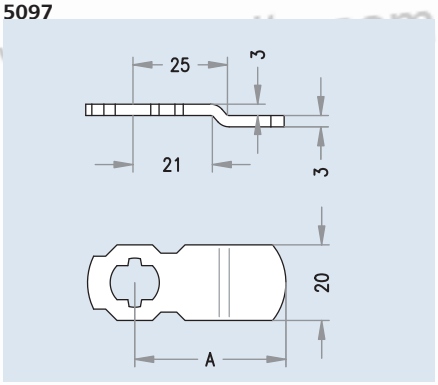

A	33,5	37	40	45	50	55	70

5099D

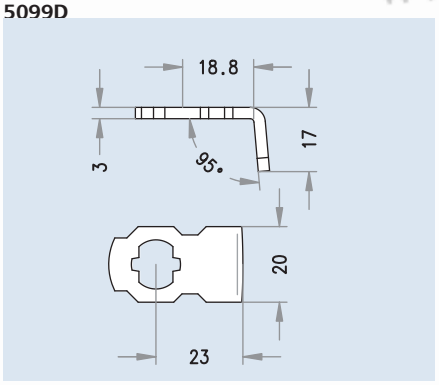

EVVA, storage, Zwick mailbox systems

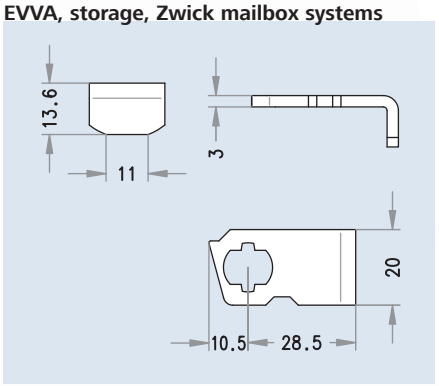

5097S

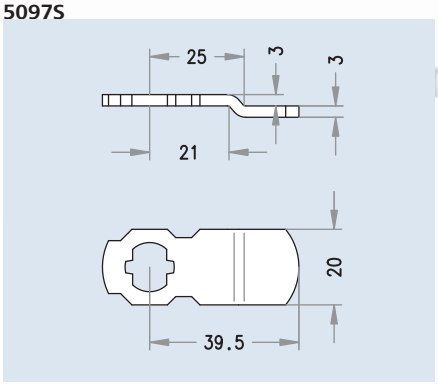

hook

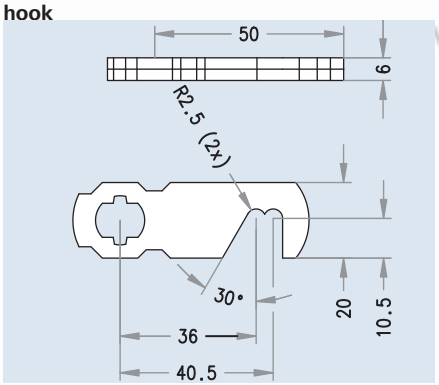

RENZ1 special mailbox systems

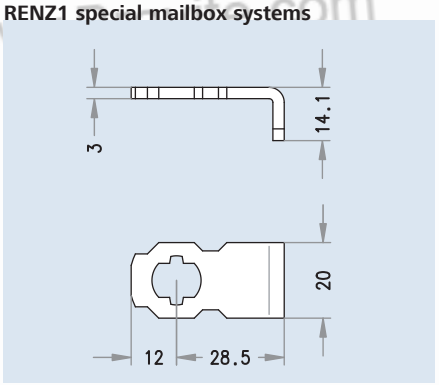

5098

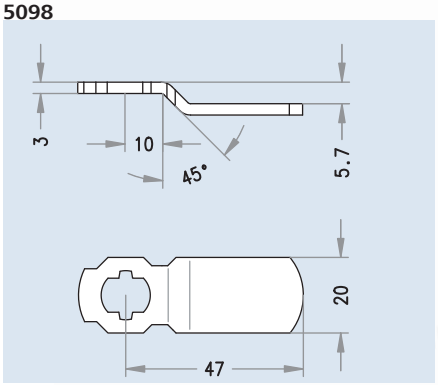

hook2

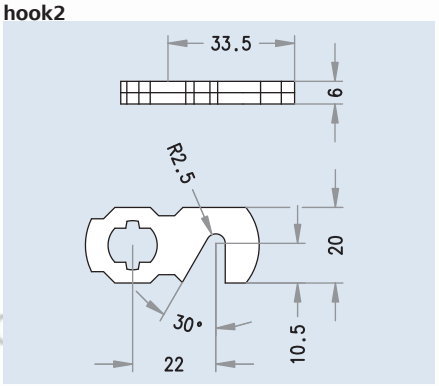

RENZ2 special mailbox systems

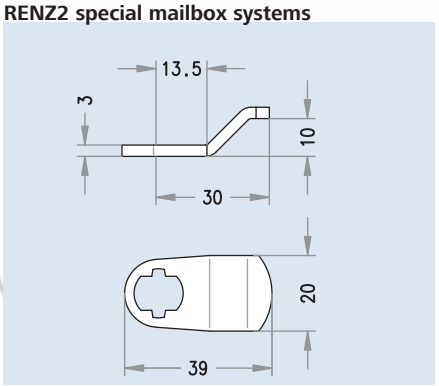

5099C

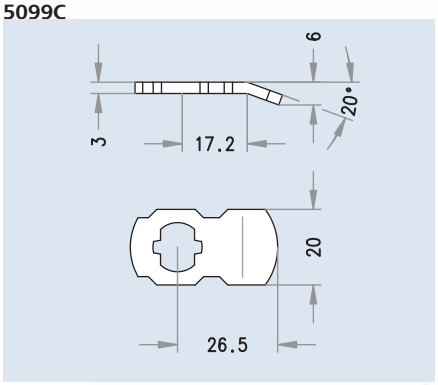

NSK

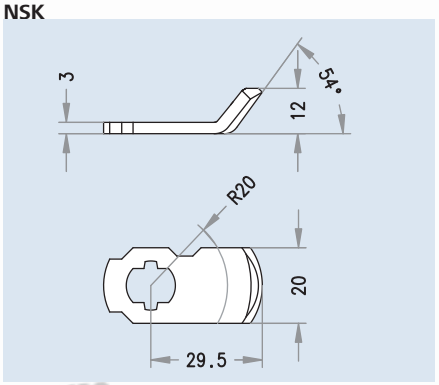

RENZ D

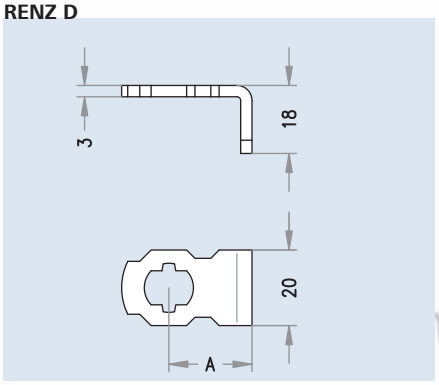

A	22	28

www.Bravite.com

www.Bravite.com

www.Bravite.com
www.Bravite.com
www.Bravite.com
www.Bravite.com
www.Bravite.com
www.Bravite.com
www.Bravite.com

www.Bravite.com

www.Bravite.com
www.Bravite.com
www.Bravite.com
www.Bravite.com
www.Bravite.com
www.Bravite.com
www.Bravite.com

www.Bravite.com

COMFORT | ORGANISATION | SECURITY

EVVA
access to security